VÄDERSTAD

NZ Aggressive

series

NZA 600-1000

NZA 500ST

NZA 600T

Manufacturing No.24732-

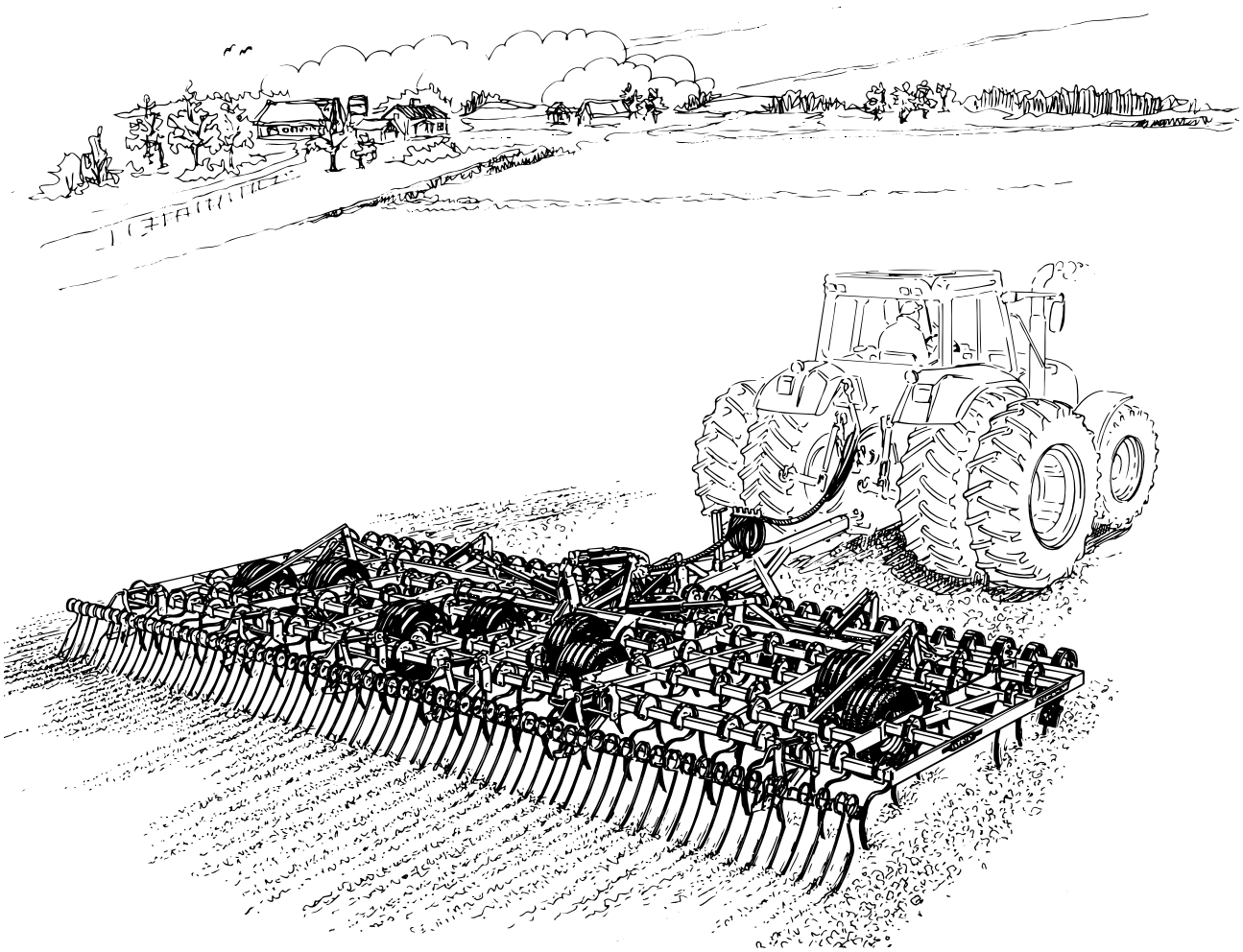

Instructions

902616-en

13.12.2012

ver. 1

Original instructions

INTRODUCTION

The NZ Aggressive is a rugged sowing bed harrow designed for efficient, heavy-duty working of the soil.

The harrow has a tine pitch of 7.5 cm distributed on 5 axles, making it very accommodating. The ample wheel fitting ensures excellent bearing capacity.

The front Crossboard crushes clods and levels the field. The harrow can be fitted with an optional rear Crossboard for further working of the field. The Crossboard at the rear is especially suited for working hard soils.

The NZA also has a following harrow which levels and pulverises the soil.

Switching between the work and transport positions is done using the hydraulic installation.

EC DECLARATION OF CONFORMITY FOR THE MACHINE
in accordance with the EU Machinery Directive 2006/42/EC

Väderstad-Verken AB, P.O. Box 85, SE-590 21 Väderstad, SWEDEN
hereby confirms that the cultivation tools hereunder have been manufactured in accordance with the Council Directive 2006/42/EC.

The above declaration covers the following machines:
NZA 500ST, NZA 600, NZA 600T,,
NZA 700, NZA 800, NZA 900 och NZA 1000
manufacturing no. 24732-30000.

Väderstad 2010-06-18

Lars-Erik Axelsson
Legal requirements coordinator
Väderstad-Verken AB
Box 85, 590 21 Väderstad

The undersigned is also authorised to compile technical documentation for the above machines.

1 Safety rules

1.1 Before using the cultivator

Figure 1.1

! Read the instructions carefully and make sure you understand them.

! Always pay extra attention to the instructions or diagram when you see this symbol!

! Learn to handle the implement carefully and correctly! The implement could be dangerous in the wrong hands and if used without taking proper care.

1.2 Warning decals

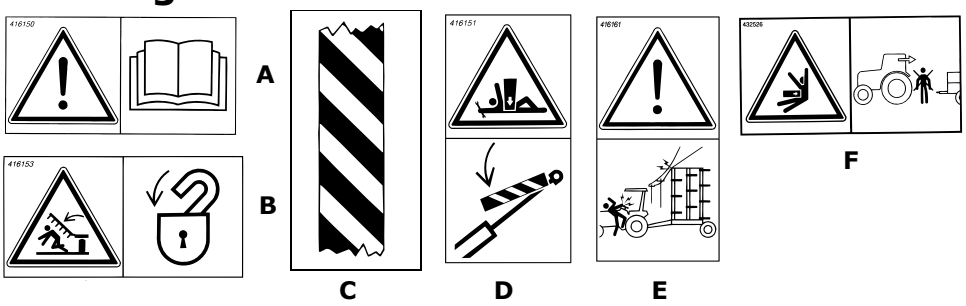

Figure 1.2

A Read the instructions carefully and make sure you understand them.

B Always make sure that the entire working area and folding area of the cultivator are unobstructed. Never walk under a suspended section.
Always check that the automatic catches have engaged in connection with transport and parking. To ensure reliable operation of the automatic lock, grease the locking bars periodically.

C Warning tape, pay attention to the danger of crushing and impact injuries. Also used on safety components.

D Never work under the implement when carrying out service or maintenance without ensuring that it is properly supported on stands or standing on some other firm surface. Block the lifting ram on the centre section using the yellow locking device (applies to NZA 600-1000) or the stopper (applies to NZA 500 ST). Also refer to *”4.1 Securing the implement for service” on page 35.*

E Warning for excessive transport height, particularly NZA 1000. See ”*5.2 Technical Data” on page 47.*
Beware of overhead power lines, viaducts, portals, trees etc. Always check the maximum permitted transport height.

F Do not stand between the tractor and the implement when the tractor is reversed and the implement hitched.

1.3 Other safety rules

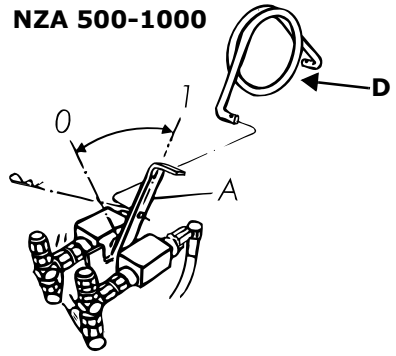

Figure 1.3

- **!** Always keep the reversing valve of the wing folding hydraulic ram closed during transport on the road or whenever persons are in close proximity to a folded up wing section, e.g. when replacing tines. Remove the rod D and move the lever A to the front. See “Figure 1.3”, position 0.
- **!** When servicing or repairing the hydraulic system, the wings should be folded down and the harrow should be lowered onto level, solid ground! Collect any spilled oil.
- **!** When transporting the implement on public roads, show sound judgment and drive carefully. Prior to transport on public roads in wet conditions, remove dirt that may fall off from both the tractor and the harrow.
- **!** This machine/implement and the fitted tyres are dimensioned for a maximum speed of 30 km/h on a good country road.
- **!** The owner/driver has sole responsibility for observing local traffic regulations when driving on a public road.
- **!** Prior to making the hydraulic connections, make sure the male couplings on the harrow and the female couplings on the tractor are clean and free from dirt.
- **!** To maintain the high level of quality and operational safety of the implement, use only Väderstad genuine spare parts. The warranty and any complaint commitments will become void if other than genuine parts are used.
- **!** Any welding work on the machine/implement should hold professional standard. Incorrect welding may result in serious injuries or possibly fatal injuries. If in doubt, contact a professional welding service for proper instructions.

1.4 Location of warning decals on the machine

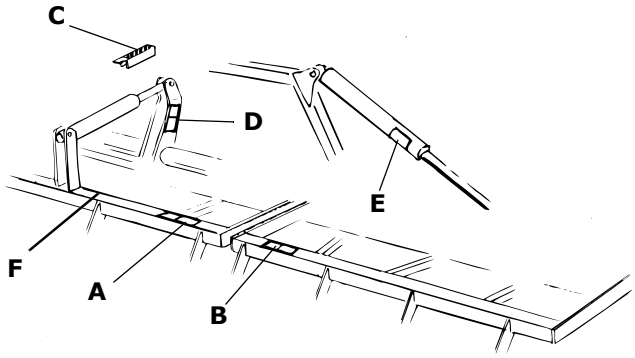

Figure 1.4

1.5 Data plates

! The machine is equipped with either a combination of signs 1.5.1, Serial number plate, and 1.5.2, CE plate, or 1.5.3, Machine label.

1.5.1 Serial number plate

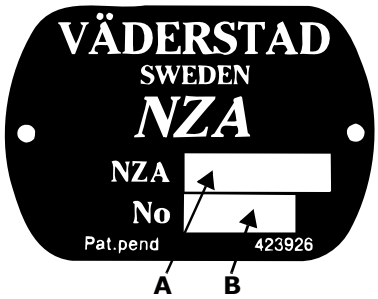

Figure 1.5

A Type No.

B Manufacturing No.

1.5.2 CE plate

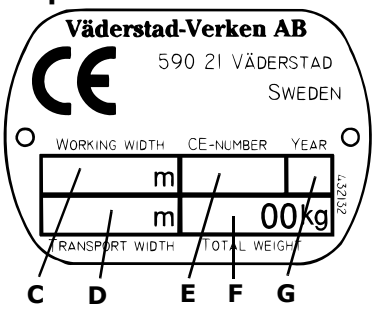

Figure 1.6

C Working width

D Transport width

E Serialnumber, CE

F Weight (kg), including following harrow and front and rear Crossboards. For the NZA 500ST, 600 T, the weight indications include the following harrow and the front Crossboard. For the NZA -6 the weight indications include the following harrow and the front Crossboard. For more information, see ”*5.2 Technical Data” on page 47*.

G Year of manufacture

1.5.3 Machine label

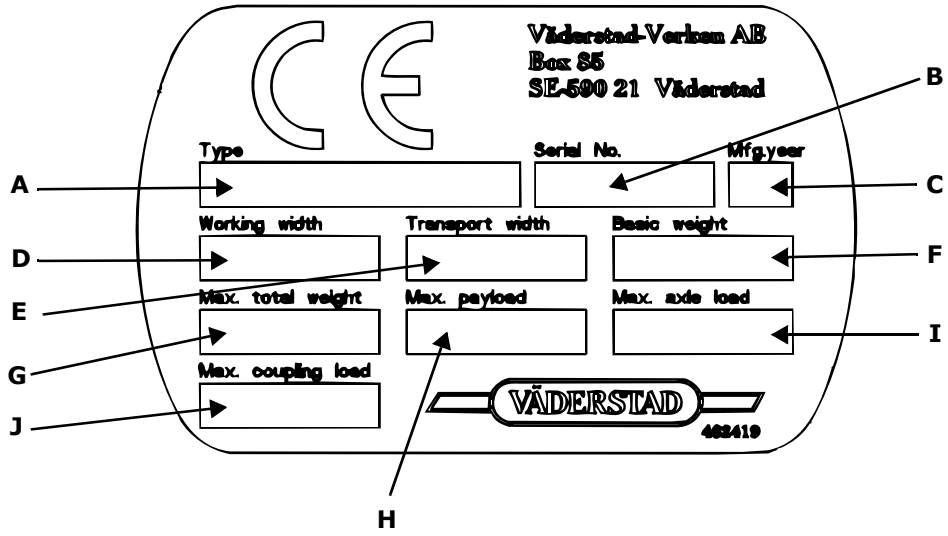

Figure 1.7

A Machine type

B Manufacturing serial number
(Always state the serial number of your machine when ordering spare parts and in case of servicing or warranty claims.)

C Year of manufacture

D Working width

E Transport width

F Tare weight of the basic machine

G Maximum total weight

H Maximum permitted payload

I Maximum permitted axle loading

J Maximum coupling load (at the tractor hitch)

! Also refer to *”5.2 Technical Data” on page 47*.

1.6 Moving the machine when not hitched to a tractor

NOTE! If the machine must be moved when not hitched to a tractor,it must be transported on a machine trailer or lorry flatbed!
The machine must be rolled onto and off the transport vehicle using a tractor. Lifting with a crane is prohibited!

1 Set the machine to the transport position; see *”3.3.2 Switching to the transport position” on page 22*.

2 Reverse the machine lengthwise onto the trailer or flatbed. If using a flatbed, a ramp, loading pier or similar will be required. Take great care. Check that no machine parts are damaged during loading.

3 Lower the machine so that the cultivator tines and transport wheels rest on the ground. Lock the centre section's lifting ram by using the setting device.

4 Secure the machine's transport wheels to prevent rolling using chocks or similar.

5 Unhitch the tractor from the machine.

6 Secure the wing sections ready for transport using tension straps (A) or similar; see “Figure 1.8”.

7 Secure the machine using suitable lashing equipment in accordance with applicable rules. The lashing equipment must be attached to the machine at the locations indicated by the decals; see “Figure 1.8”.

! For information on the machine's dimensions and weight, see *”5.2 Technical Data” on page 47*!

! Always make sure that you comply with applicable national regulations concerning transport dimensions, requirements for escort vehicles or similar!

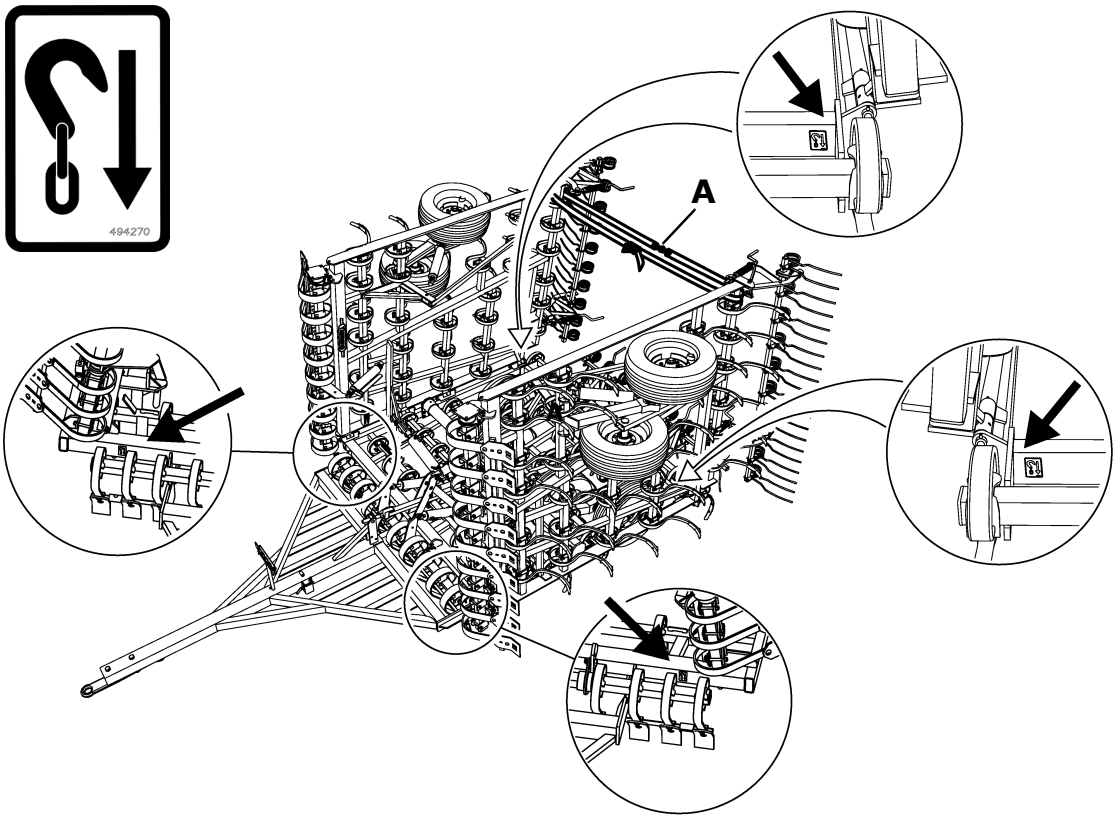

Figure 1.8

2 Assembly Instructions

Never work under the implement during loading, unloading or installation work. Pay close attention to safety! The implement is very heavy. Only use lifting devices that have sufficient lifting capacity. For weight indications, see ”*5.2 Technical Data” on page 47*.

On delivery, the implement may be incompletely assembled in a state that varies with the method of transport, etc. Use the following assembly instructions as applicable.

2.1 Lifting and unloading

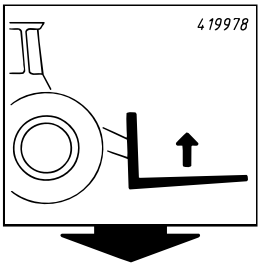

Figure 2.1

Lift the harrow from the front using pallet forks placed under the frame. The lifting positions are marked with lifting symbols.

Carefully unload the draw-bar, following harrow section and, when applicable, the Crossboard sections and related parallel rods from the frame. The following harrow thills are packed on a pallet.

2.2 Mounting the tines

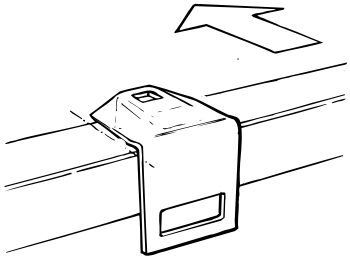

Figure 2.2

Prior to delivery and to minimise the transport dimensions, all tines on the fifth tine shaft have been dismantled. To facilitate easy loading and unloading two tines on the third tine shaft have also been dismantled (this does not apply to the NZA 900 and 1000). The tines are supplied packed on the frame. Assemble the tines at the indicated positions. The tine brackets should be on the right of the indications.

NOTE! Unless the tines are assembled in the correct positions, they may cause damage to the wheels during transport on the road!

2.3 Fitting the drawbar

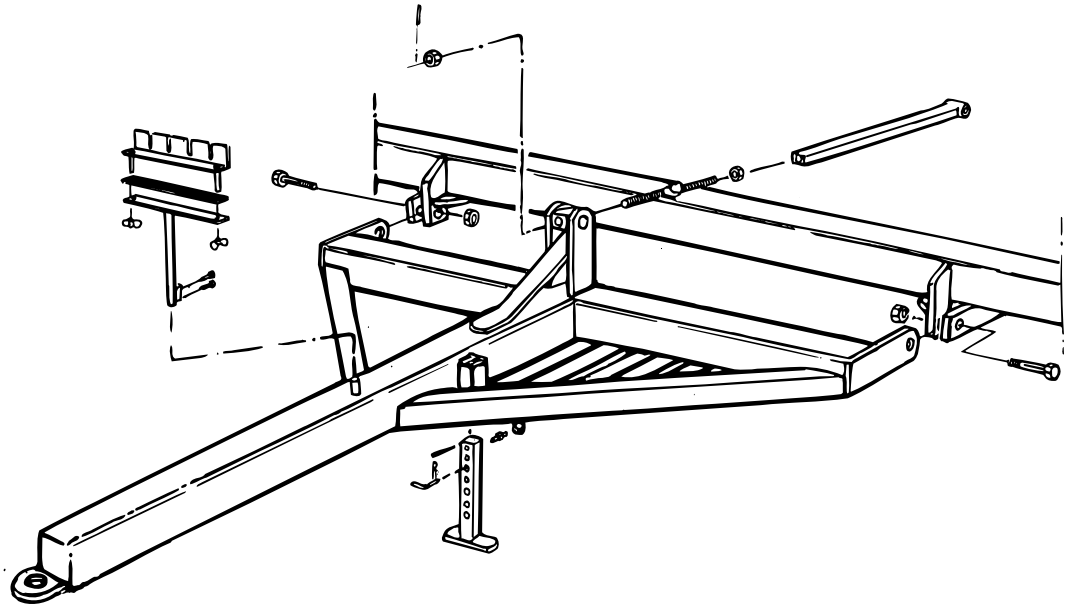

Figure 2.3

Fit the draw-bar on the centre section using the draw-bar bolts.
Connect the post on the draw-bar with the parallel rod on the turn buckle. Do not tighten the castle nut of the parallel rod fully; leave a small amount of play to allow later adjustment.
Fit the hose holder on the draw-bar.

2.4 Fitting supplementary sections (option)

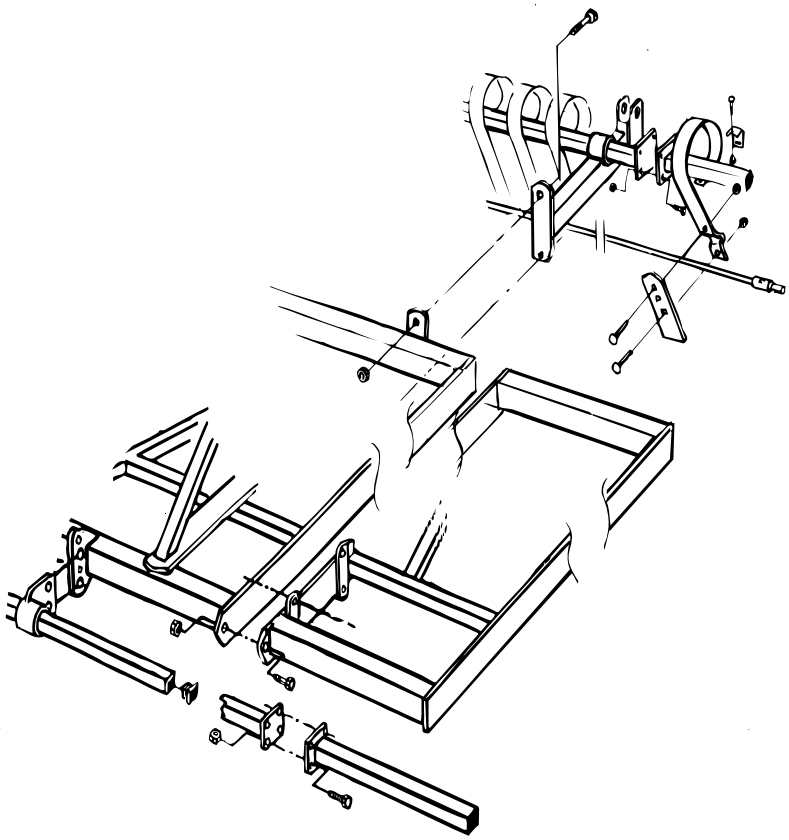

Figure 2.4

Table 2.1

NZA 800	NZA 700 + 0,5 m + 0,5 m
NZA 1000	NZA 900 + 0,5 m + 0,5 m

Fit the front bolt first, following which the other mounting plates can be bolted together.

It is extremely important to retighten all bolts after about five hours of use.

2.5 Fitting the spring for the reverse-action valve

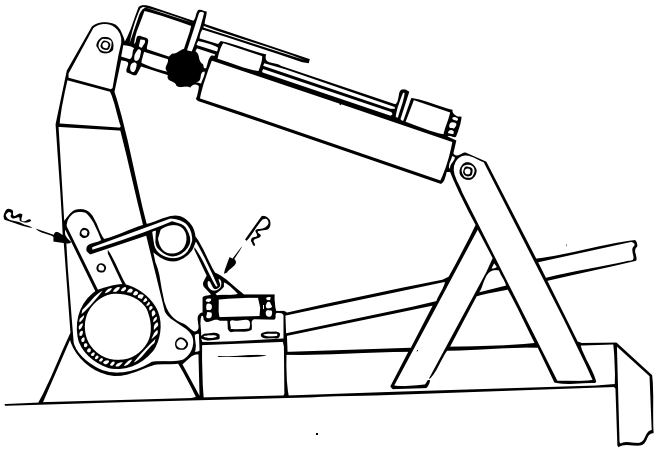

Figure 2.5

Applies to NZA 500-1000.
Upon delivery from the factory, the reversing valve spring of the harrow may in some cases not be installed. Fit the spring as shown in the figure, and lock it in place with the pins.

For valve adjustment, see *"3.5 Adjusting the reverse-action valve" on page 24*.

2.6 Fitting the rear Crossboard (option)

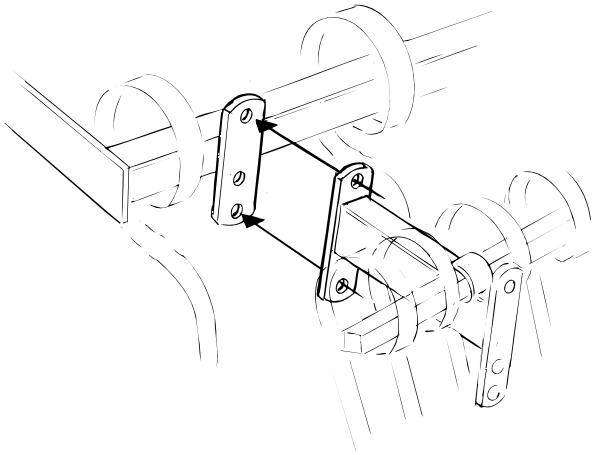

Figure 2.6

The Crossboard sections should be screwed onto the brackets on the harrow frame. They can be fitted at two different height positions. The figure shows the standard fitting.

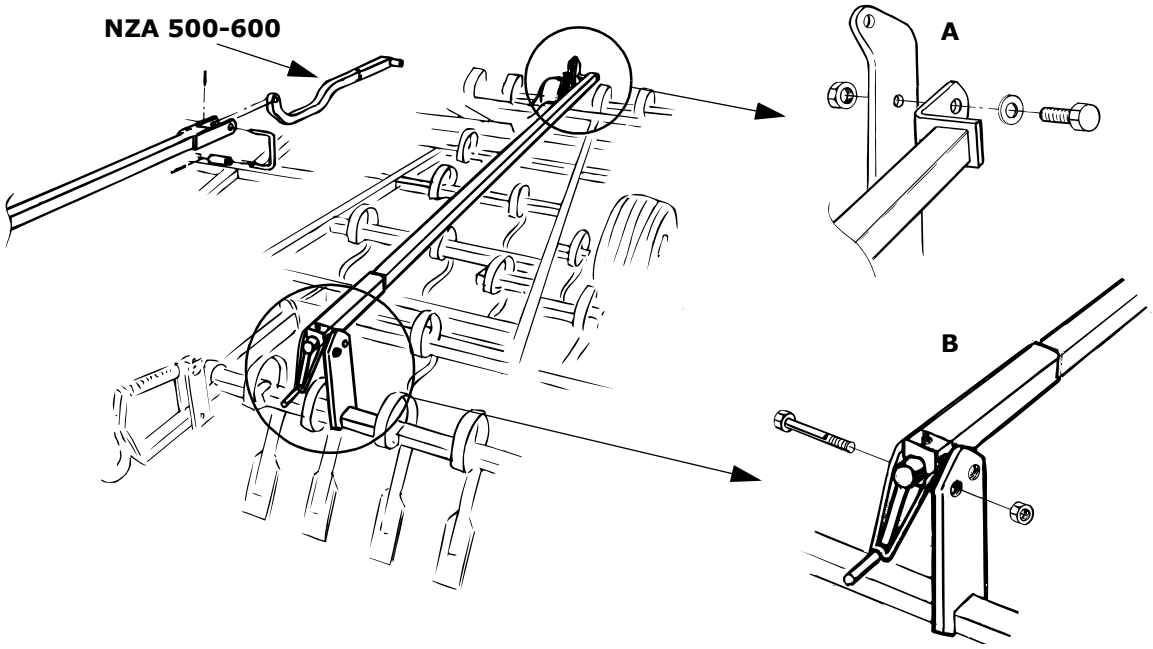

Figure 2.7

Fit the parallel rods between the lifting arms on the front and rear Crossboards. Fit the rods in the rear hole on the rear lifting arms (see position B). The rods must be parallel in the longitudinal direction of the harrow. The grease nipple next to the crank must point upwards.

Fit the rods on the correct side of the lifting arms to avoid that the rods touch the hoses and connectors on the Crossboard hydraulic rams. See position A. Note that the screws act as a joint and as such must not be tightened. Lock the screws using lock nuts on the opposite side of the lifting arms.

2.7 Fitting the following harrow

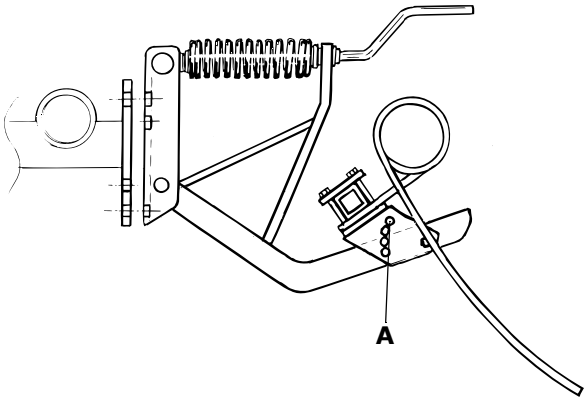

Figur 2.8

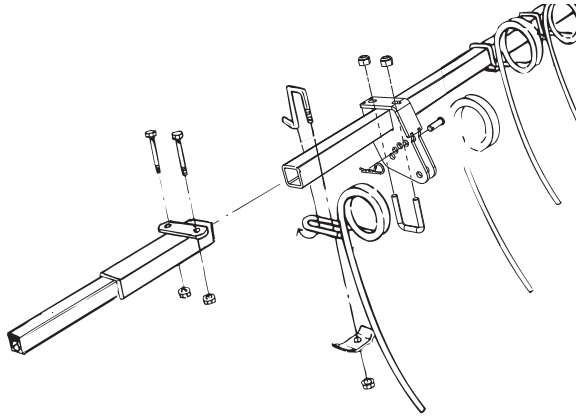

Figur 2.9

The following harrow thills should be screwed into the brackets on the harrow frame or in the brackets on the rear Crossboard. They can be fitted at two different height positions. In the standard configuration, the thills should be set in the lower positions. See the figure.

The following harrow sections are hitched onto the thills and locked in place with the screws A. Note that the screws act as joints, and thus must not be tightened.

When assembling the extensions, see “Figur 2.9”.

2.8 Fitting track eradicators (option)

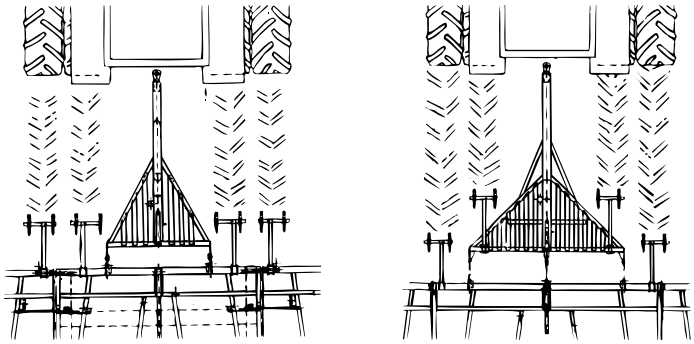

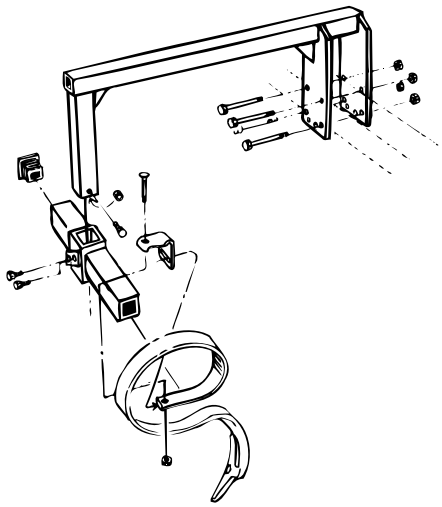

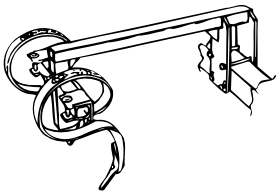

Figure 2.10

Figure 2.11

The track eradicators should be fitted on the front beam or the draw-bar as shown in “Figure 2.10”. Lateral positioning depends on the tread of the tractor.

NOTE! When folding up the wing section on a harrow with track eradicators on both the centre and wing sections, it is very likely that the track eradicators will collide if set higher than the harrow tines. Always make sure the track eradicators do not come into contact with each other when folding up the harrow.

2.9 Fitting the connecting drawbar (option)

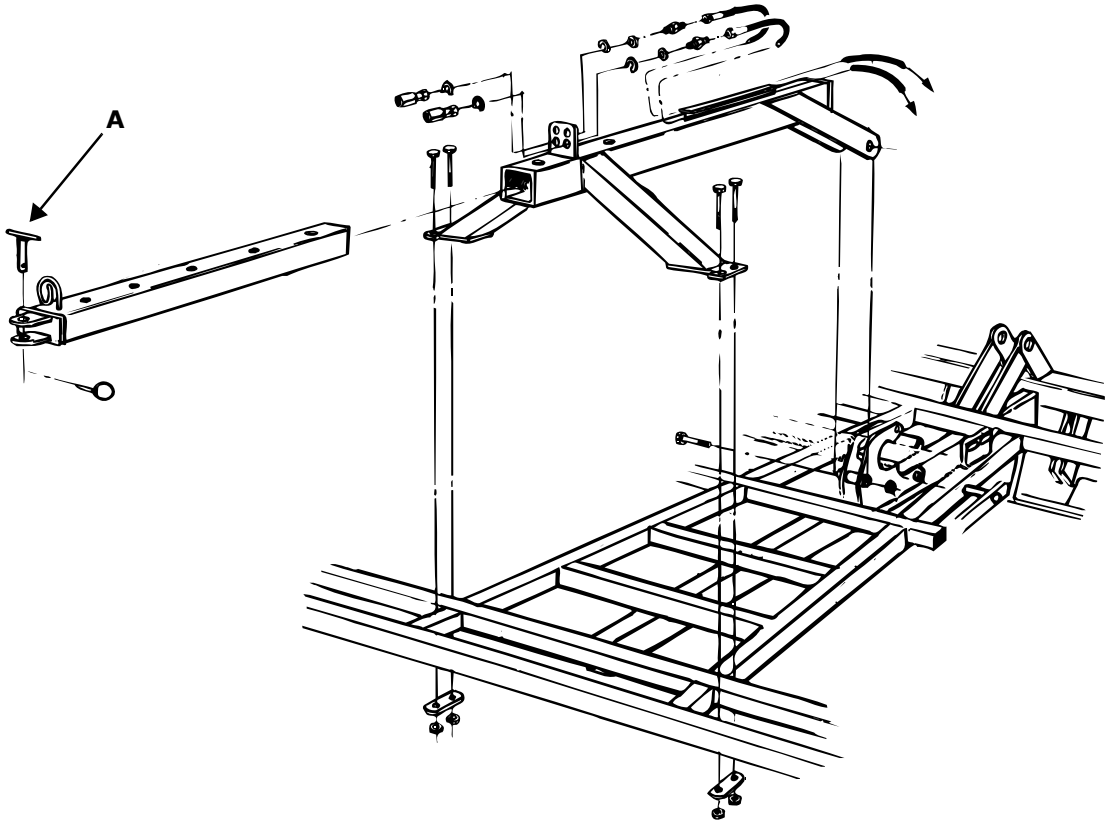

Figure 2.12

NOTE! When hitching an implement to the draw-bar, make sure the original cotter (A) or another cotter with the same diameter is used!

2.9.1 Fitting the draw-bar hoses onto the NZA 500-600

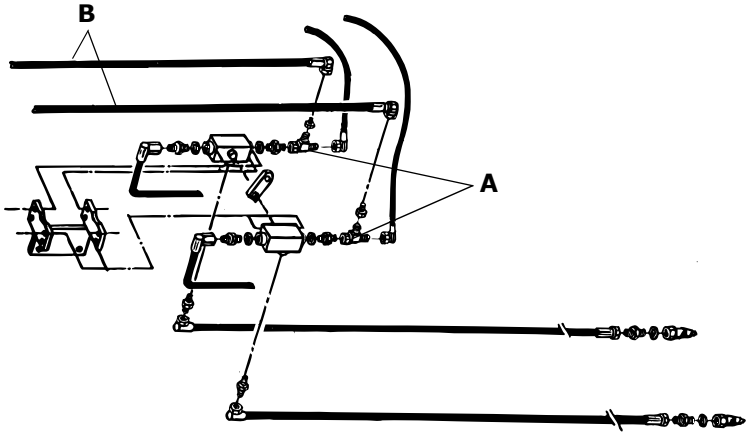

Figure 2.13

Remove the hydraulic hoses of the wing folding ram from the reversing valve, and connect the T-pipe (A) to the nipple. Fit the ram hoses to the nipple facing to the front. Fit the connecting draw-bar hoses (B) to the nipple facing up.

2.9.2 Fitting the draw-bar hoses onto the NZA 700-800

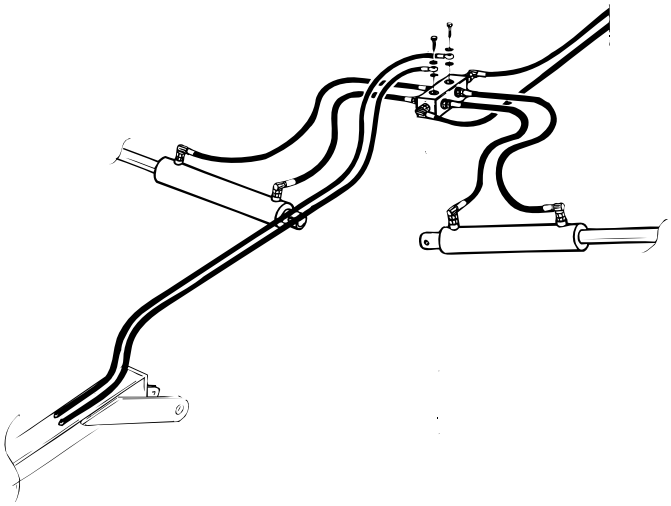

Figure 2.14

2.9.3 Fitting the draw-bar hoses onto the NZA 900-1000

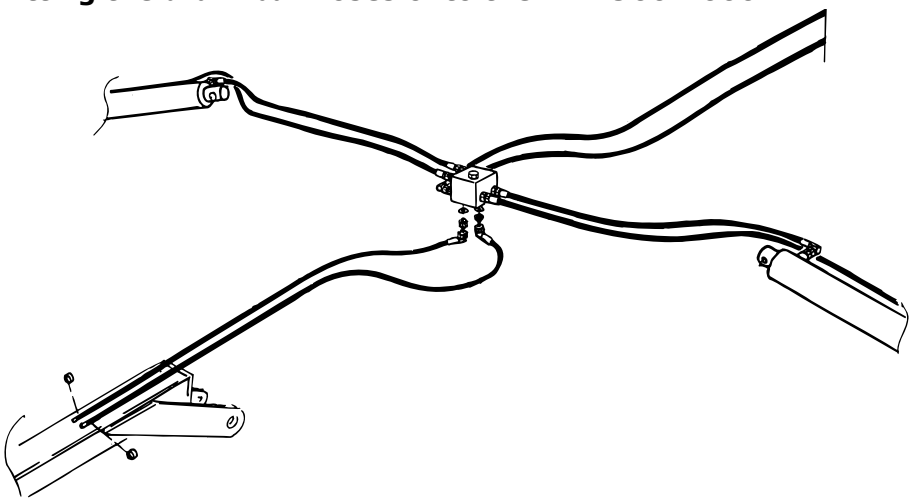

Figure 2.15

3 Instructions and adjustments

NOTE! All basic settings and adjustments must always be made on a level surface with the cultivator hitched to the tractor and the wing sections lowered.

3.1 Hitching the cultivator

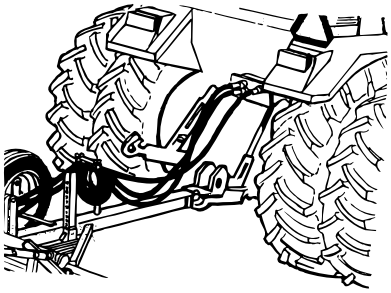

Figure 3.1

Hitch the harrow to the tractor. Lift and secure the support leg.

Connect the hydraulic hoses. Be very careful that the hydraulic hoses are correctly connected to the hydraulic couplings on the tractor. The hoses are marked with colours. From mftg. no. 24732 the following markings apply:

NZA 500-600:

- Hoses with yellow markings: Lifting and lowering of the harrow.
- Hoses with blue markings: Wing folding and Crossboard operation. If the harrow is equipped with draw-bar connectors, these hoses can also be connected to the hydraulic connectors next to the draw-bar.
- Hoses with white markings: Additional hoses for other following implements.
- Hoses marked red: Adjusting the harrow´s working depth. NOTE! Does not apply to NZA 500 ST.

3.2 Verifying the drawbar eye of the implement

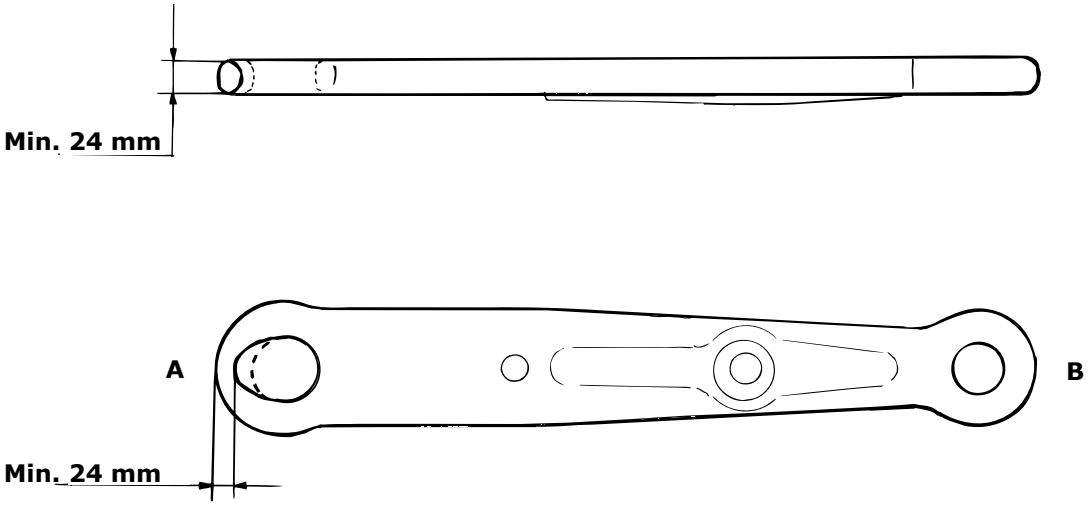

Figure 3.2

The implement has a reversible and replaceable drawbar eye. Side A of the drawbar eye is intended for connecting a hitch hook, while side B is intended for connecting an agricultural drawbar. Be sure to replace the drawbar eye when excessively worn. The figure shows the minimum recommended drawbar eye dimensions. Also inspect the bolted joint of the drawbar eye.

NOTE!Incorrect drawbar eye welding may drastically reduce its durability. We always recommend regular replacement of the drawbar eye!

3.3 Switching between transport and work positions

The NZA 500-1000 uses a common hydraulic circuit for wing folding and Crossboard operation. In the raised position, the circuit controls wing folding, while in the lowered position, the circuit controls Crossboard operation. A reversing valve ensures that the correct function is active.

The harrow features automatic locking and unlocking of the wings.

3.3.1 Switching to the work position

1 Completely raise the harrow.

2 Make sure the Crossboard is not lifted to the maximum. If it is, there is risk that it will impact with the centre section of the harrow. Applies to NZA 500-600.

3 Apply hydraulic pressure to the folding ram. The locking device is unlocked automatically and the wings are folded down.

4 Lower the harrow to the ground.

3.3.2 Switching to the transport position

1 Completely raise the harrow.

2 Apply hydraulic pressure to the folding ram. The wings are then folded up and the locking device is automatically engaged.

3.3.3 Automatic locking devices

NZA 500-800 **NZA 900-1000**

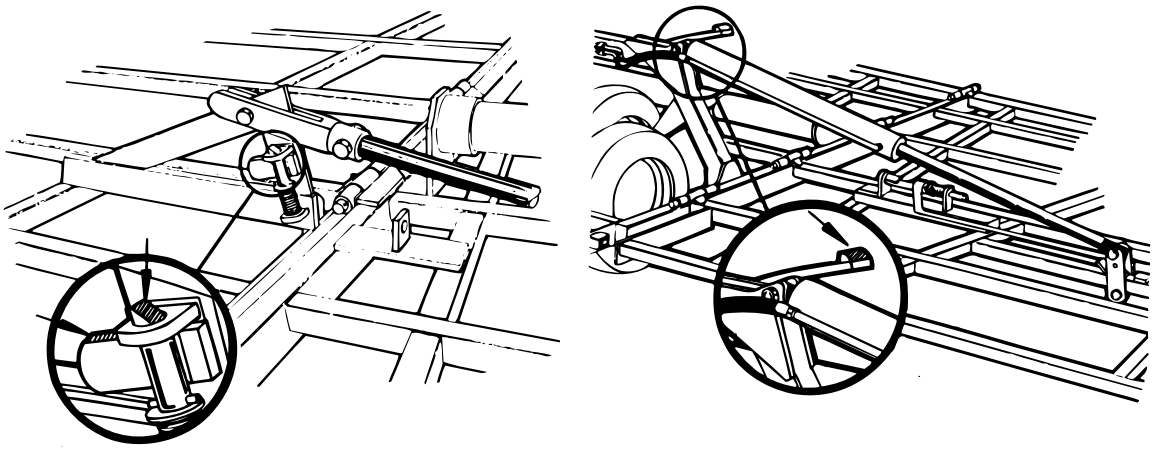

Figure 3.3

It is important for the locking device to be well greased at the indicated points to be sure that it will operate efficiently.

Check to make sure the folding ram(s) is(are) completely extended when the harrow is in the work position. Always check that the catches have been locked prior to transport or parking.

3.3.4 Securing the wing section prior to transport

NZA 500-1000

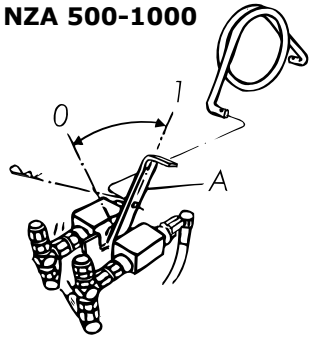

Figure 3.4

To prevent involuntary unfolding of the wings, e.g. by accidental operation of a hydraulic lever in the tractor cab, the reversing valve spring can be unfastened to position 0. Always apply this setting prior to transport on the road or allowing anyone entry close to a folded up wing.

3.4 Adjusting hose length

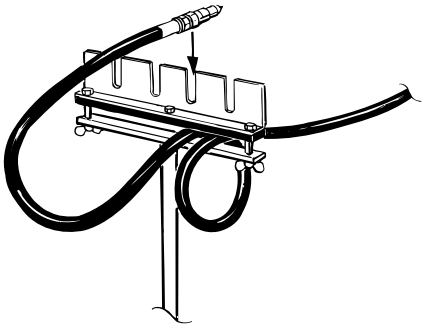

Figure 3.5

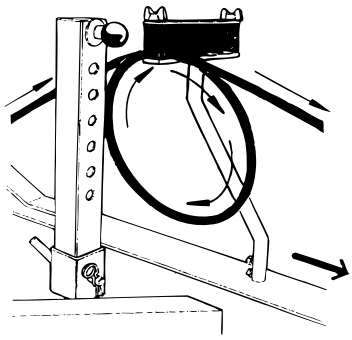

Figure 3.6

The cultivator is equipped with an adjustable hose clamp.

Adjust the hoses to a suitable length and tighten the wingnuts.

When the work is completed, attach the quick connectors to the upper holes or slots in the hose holder.

3.5 Adjusting the reverse-action valve

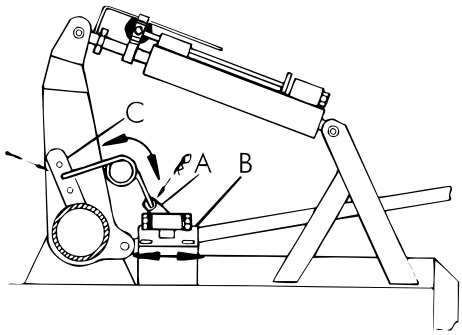

Figure 3.7

Applies to NZA 500-1000.
The reversing valve controls the hydraulics between the wing folding action and Crossboard. When the harrow is lowered into the work position, the hydraulics are engaged to the Crossboard; when the harrow is raised onto its wheels, the hydraulics operate the wing folding action.

Lever A should always be in the end position for transport and harrowing. This is adjusted by sliding valve bracket B forwards or rearwards and also by changing the position of the spring in the holes on upright C.

After adjustment, the bolts securing valve bracket B should be tightened to prevent the valve from sliding out of position.

3.6 Adjusting the turnbuckle

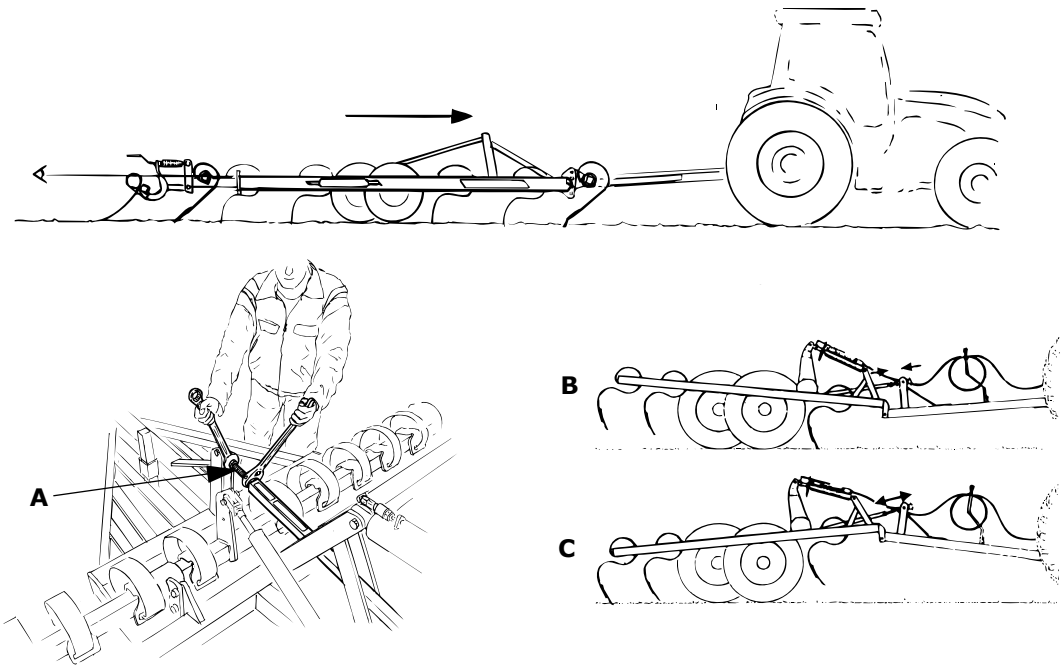

Figure 3.8

Adjusting the parallel adjustment screw is done when the harrow is lowered into the work position in the field. Check that the harrow is parallel with the ground while driving.

Adjust longitudinal inclination of the centre section by adjusting the parallel adjustment screw A.

! The front is lowered when turning the parallel adjustment screw clockwise. See position B.

! The front is raised when turning the parallel adjustment screw counter-clockwise. See position C.

To enable later adjustment, ensure that the parallel adjustment screw always is properly greased.

3.7 Setting the working depth, Master and slave systems, NZA 600-1000

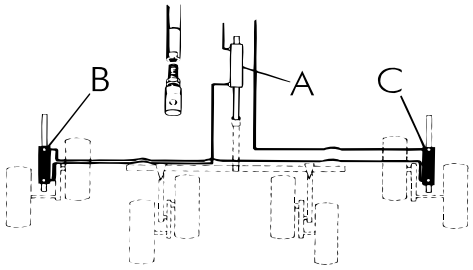

Figure 3.9

After adjustment of the cultivator's longitudinal inclination by means of the turnbuckle, the master and slave system will have to be adjusted.

The cultivator must be hitched to the tractor and the wing sections folded out.

The working depth (for cultivating) is controlled by three hydraulic rams coupled in series in a Master and Slave system. To ensure an even working depth across the entire width of the cultivator, before starting work its hydraulic ram must be bled, ”zeroised” and adjusted relative to one another as follows:

! Raise the seed drill to the top position so that all hydraulic rams are fully extended. Keep the hydraulic lever in this position with the tractor engine running at half speed for about 15-20 seconds. The rams have an overbleed arrangement in the top position so that the fluid can pass through the system and flush out any air. At the same time, the rams are "zeroized" in relation to each other. Always repeat this procedure for a few seconds when hitching the seed drill to the tractor, before adjusting the seed drill, after extending and a few times during the working day. NOTE! Do not screw on any fitting in order to release air!

After any work such as replacing a seal in a ram, air must be bled from the system as described above, but for a period of approx. 1,5 minutes.

Adjustment must be carried out without any of the piston rods being disconnected from the machine.

Default settings.
NOTE!To obtain the correct working depth in the field, the harrow must always be fully lowered (hoses marked yellow) before any adjustment is performed.!

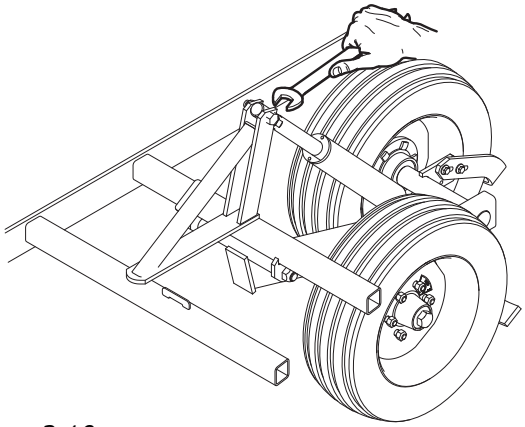

Figure 3.10

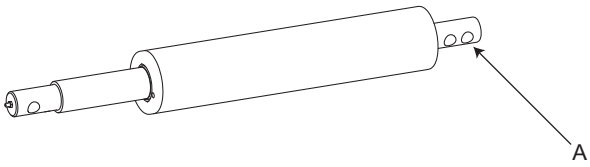

Figure 3.11

Lower the machine fully (hoses marked yellow) and then adjust the height with the harrow depth function (hoses marked red) so that the pins are 1 cm above the ground. To get the whole machine into a horizontal position, adjust the piston rod ends of the slave cylinders, see “Figure 3.10”.

NOTE!>Never unscrew the piston rod ends further than 50 mm!

If there is not enough range of adjustment on the slave cylinders, the master cylinder can be moved to its other securing hole (A), see “Figure 3.11”. The aforementioned adjustment is a basic setting. The harrow must also be fine adjusted out in the field if a 100% work result is to be obtained.

Important!

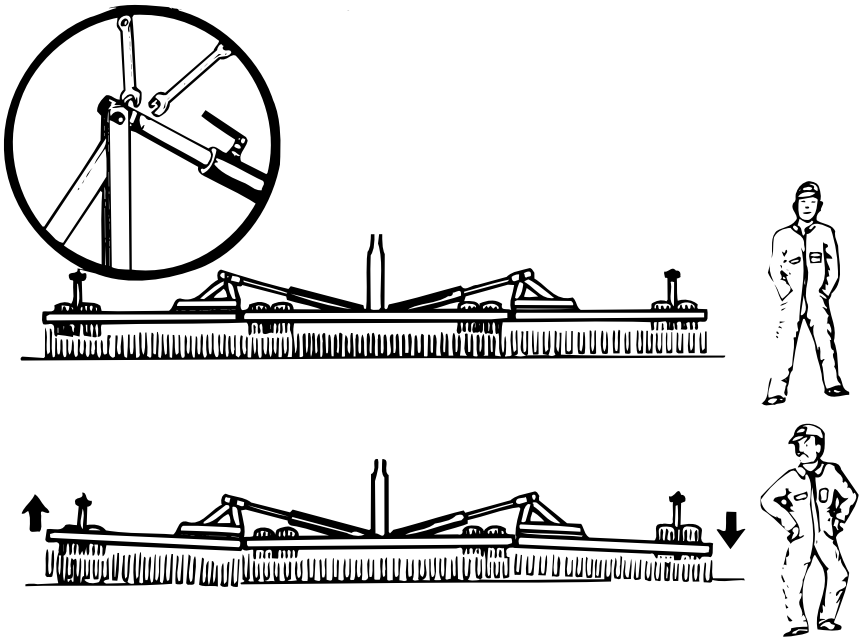

Figure 3.12

After fine adjustment in the field, the soil windrows in front of the Crossboard should be evenly distributed along the entire width of the cultivator. As described earlier, this fine adjustment is carried out by screwing in or out the piston rods on the slave rams.

This adjustment is extremely important and must be carried out with great care to ensure first-class results.

Make a habit of bleeding the hydraulic system each time the cultivator is hitched to the tractor before you start using it, and also a few times during the day when you are using the cultivator. Bleeding the system takes only 10-15 seconds.

Memory ram function

A Piston rod for lifting and lowering the machine.The piston rod is regulated by the hydraulic circuit with hoses that are marked yellow.

B Ram puck for adjusting the ram stroke and thereby the working depth of the harrow. The puck position is adjusted by the hydraulic circuit with hoses that are marked red.

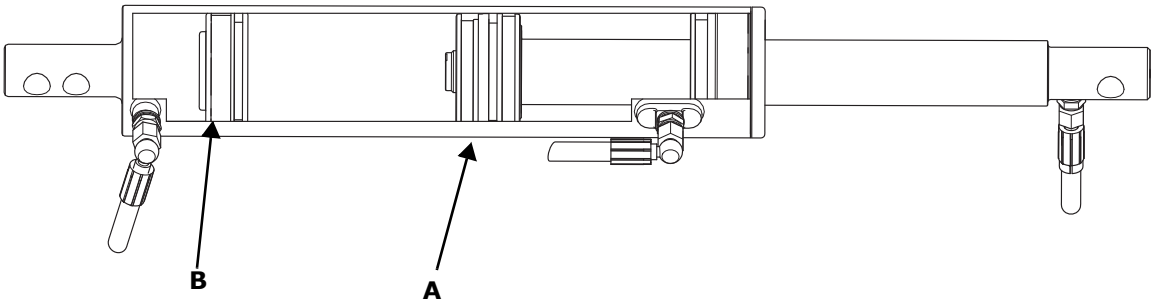

Figur 3.13

3.8 Setting the working depth and scale.

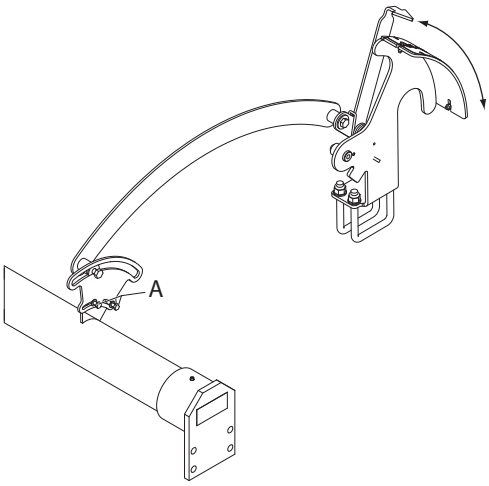

Figur 3.14

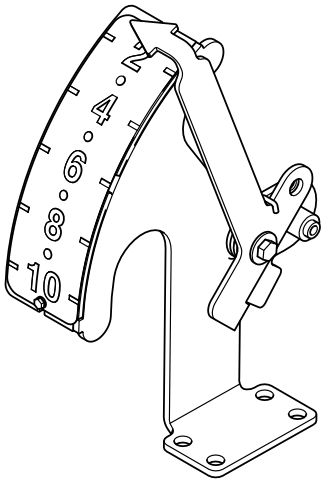

Figur 3.15

3.8.1 Setting the working depth.

The desired working depth in the field is obtained by first fully lowering the machine (hoses marked yellow), and then adjusting it with the harrow depth function (hoses marked red). When turning, for instance, the machine is raised and lowered with the normal raising/lowering function (hoses marked yellow). With the help of the memory ram the machine returns to its previous working depth.

3.8.2 Setting the scale.

Position the machine on a flat surface and adjust the height so that pins and wheels are both in the ground together. In this position the scale should start to indicate. To adjust the scale to the desired “zero value” undo the screws (A) that hold the scale in the turnbuckle. Remember that small adjustments will give large deflections.

NOTE!The figures represent a scale value, where 10 is maximum depth. The depth to which the machine works depends on prevailing conditions and must be checked out in the field.

3.9 Setting the working depth, NZA 500 ST and 600T

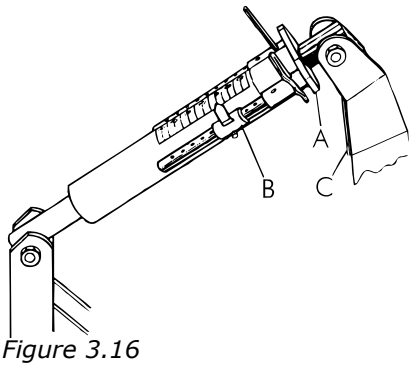

Figure 3.16

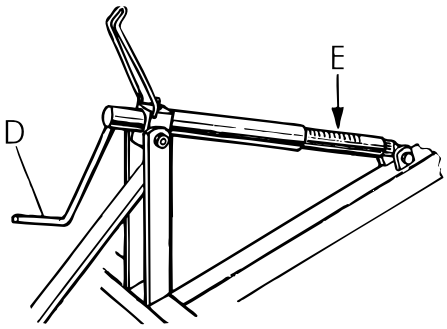

Figure 3.17

Set adjuster A on the lifting ram to the position corresponding to a working depth of a few centimetres. Cultivate with ram bracket C resting against the adjuster. Now adjust the outer wheels by means of cranks D until the tines are working at the same depth across the entire width of the cultivator.

NOTE!Check that the end sections are not "hanging" on their stop screws while set to the work position. See *"3.10 Adjusting the wing section stop screws" on page 29*. Then undo the bout marker B and move it along the adjustment device until the arrow points to the same value as the indication on the crank setting scales E. Then tighten the bout marker. The bout marker has now been adjusted and should not require any further adjustment in the future.

3.9.1 Changing the working depth:

Raise the cultivator and move the adjuster until the marker shows the desired figure. Set the cranks for the outer wheels to the same figure. Lower the cultivator against the adjuster. Changing the set figure by a whole number will change the working depth by about 2.5 cm. A higher figure on the scale will increase the working depth accordingly.

3.10 Adjusting the wing section stop screws

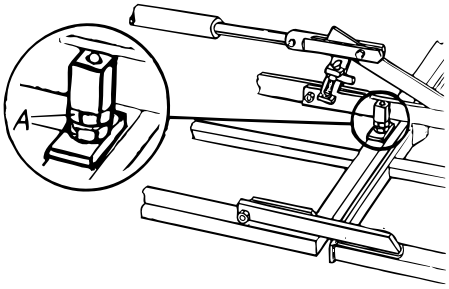

Figure 3.18

Applies to NZA 500 ST and NZA 600T
Adjust stop screws A until the wing sections are hanging by a suitable amount (adapted to conditions, normally about 40 mm at the outer ends).

Raise the side sections slightly with the folding ram, slacken the locknut and adjust the stop screw. Lower the wings and tighten the locknut.

3.11 Crossboard

3.11.1 Adjusting the front Crossboard

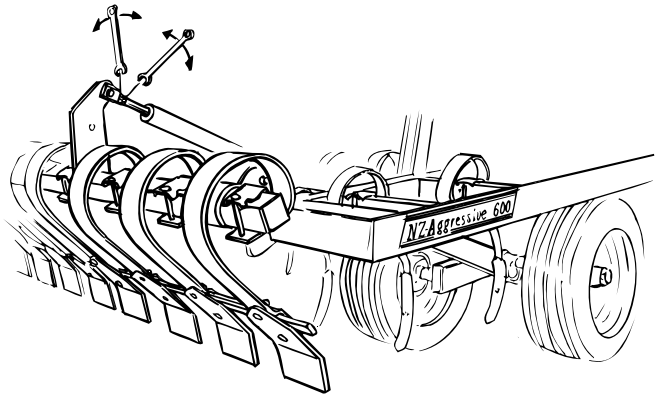

Figure 3.19

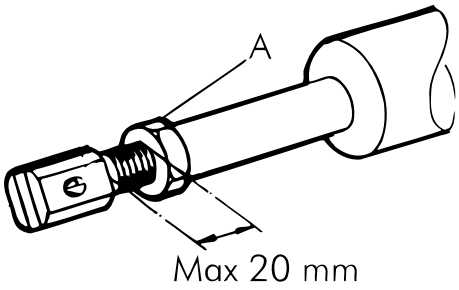

Figure 3.20

Adjust while the harrow is lowered to its work position in the field. Bleed the system prior to adjustment. See *"4.11 Bleeding the hydraulic system for the Crossboard" on page 42*.

Adjust the piston rod ends until the Crossboard is at the same height across the entire harrow work width.
The Crossboard on the centre section often need to be adjusted 5-10 mm downwards to be sure that the tractor tracks will be filled with soil.

Screwing out the hydraulic ram raises the Crossboard and vice versa.

Do not screw out the piston rod end more than 20 mm. On the ram on which the depth scale is mounted, the piston rod should not be screwed out more than 12 mm.

Make a habit of bleeding the hydraulic system each time the cultivator is hitched to the tractor before you start using it, and also a few times during the day when you are using the cultivator. Bleeding the system takes only 10-15 seconds.

! On the NZA 500-600, if the front Crossboard has been fully raised and the harrow is folded up to the transport position, the tines may collide with the centre section of the harrow. To prevent this, make sure the Crossboard is not fully raised prior to folding up the implement.

3.11.2 Adjusting the rear Crossboard (option)

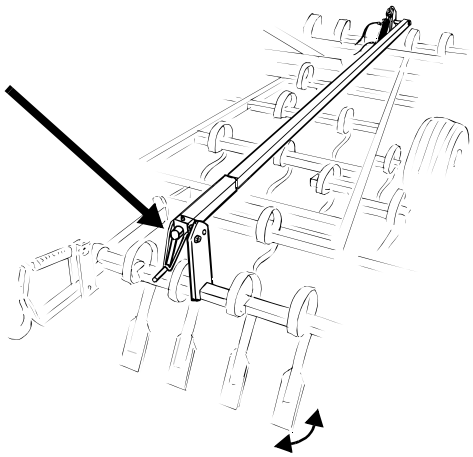

Figure 3.21

The working angle of the rear Crossboard is adjusted using the same hydraulic system as the front Crossboard, but in this case by way of a parallel rod. The relation of the front and rear Crossboards towards each other can be adjusted using the cranks on the rods. Adjust using the cranks until the rear Crossboard has the same angle behind the entire work width of the harrow. The harrow should be in the raised position when making this adjustment.

Cleaning and lubricating parallel grip cranks

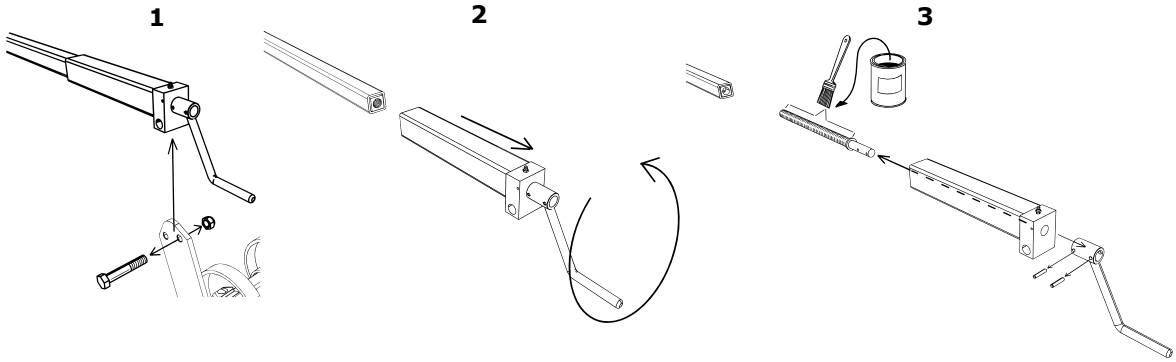

Figure 3.22

For best function, the parallel grip cranks should be cleaned and lubricated at least three times per season.

3.11.3 Stabiliser rod

Upon delivery of the implement, the stabiliser rods are fitted on the Crossboards. The stabiliser rods should only be disassembled in exceptional cases, such as when driving on extremely light soil or in very humid conditions.

Fitting the rods

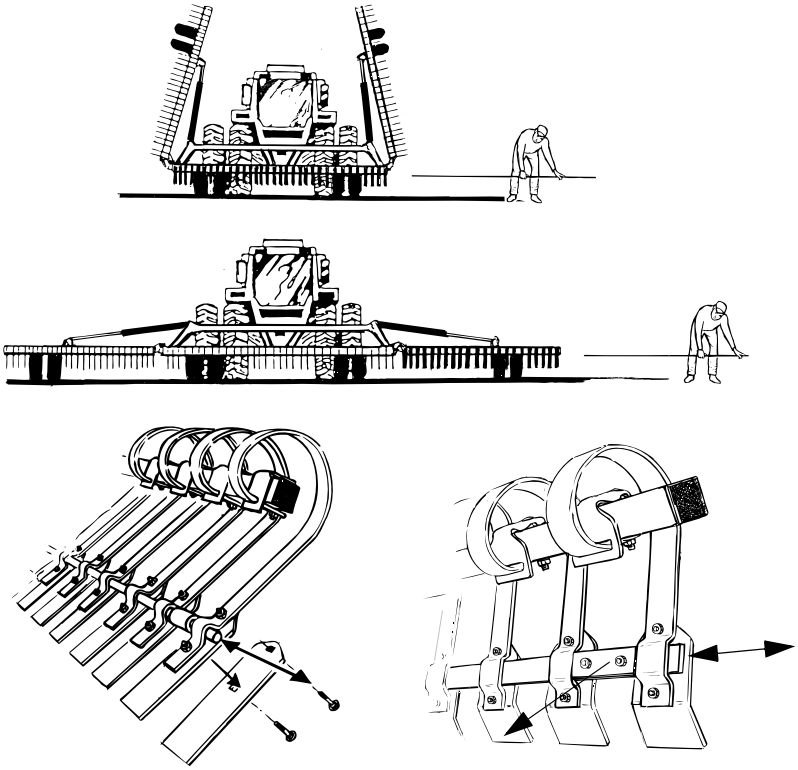

Figure 3.23

Fold up the harrow. Make sure the locking devices on the wings are set in place. Close the cock on the wing folding hydraulics. See "Figure 4.5" or "". Raise the harrow from the ground until the Crossboard tines do not touch the ground. Fit the stabiliser rods onto the centre section.

Fold down the harrow to the work position. Install the stabiliser rods in the wing sections making sure they point in the direction of the harrow centre.

! On the NZA 500 ST and NZA 600T, the wing section stabiliser rods for the front Crossboard must be installed from inside and point outwards.

3.11.4 Quick Change System (accessories, does not apply to model ST and T)

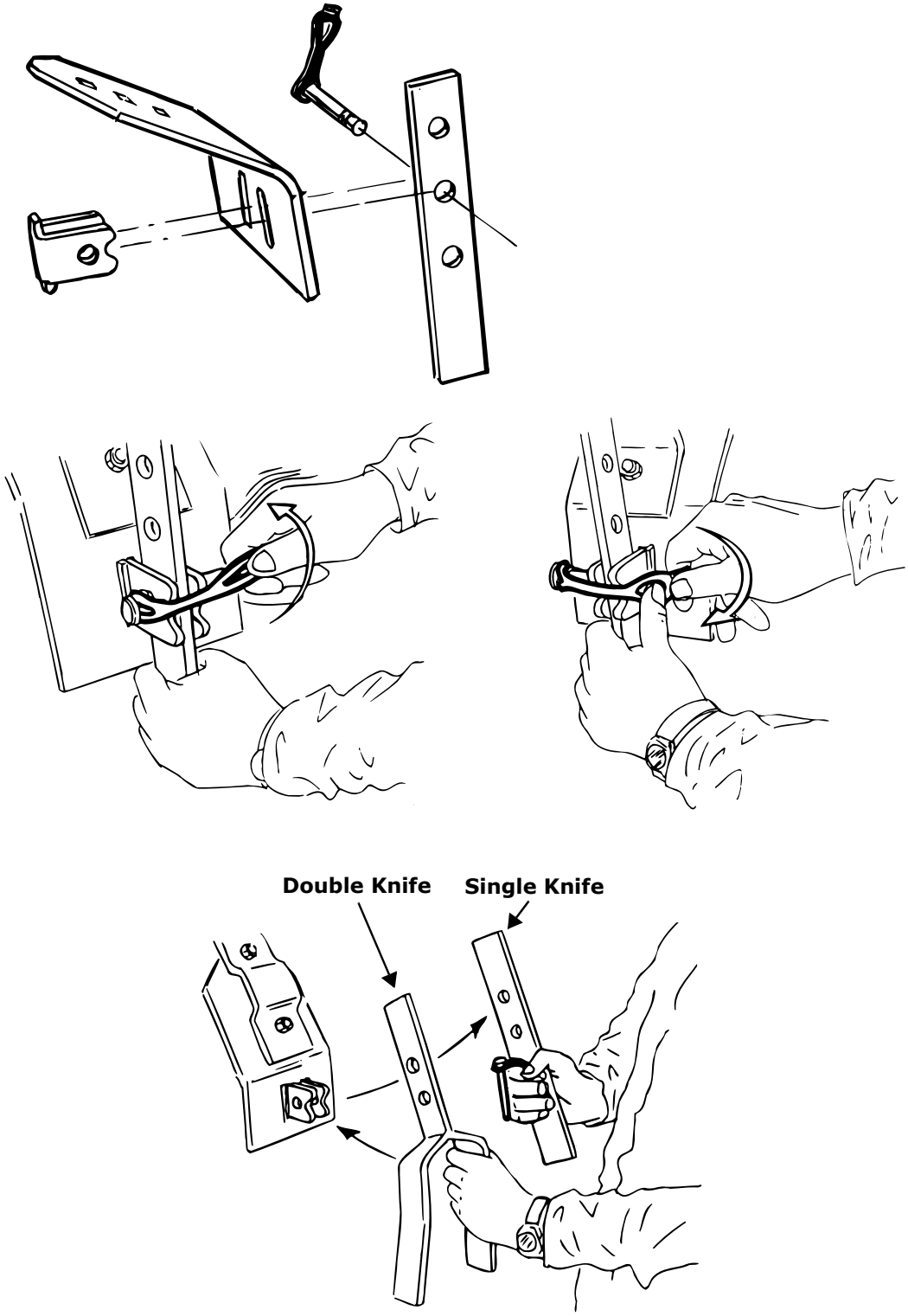

Figur 3.24

3.12 Adjusting the following harrow

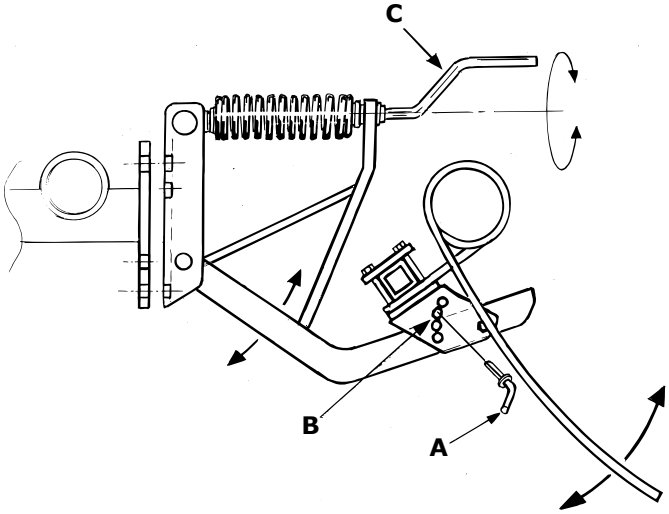

Figure 3.25

The following harrow is spring-loaded and features a release mechanism to prevent damage on the implement when reversing.
The working depth and angle of the tines can be easily adjusted. The harrow should be in the raised position when making this adjustment.

Adjust the working angle by moving the cotter pin A in the series of holes B.

Adjust the working depth by using the cranks C. Set all the cranks to the same length.

4 Maintenance and service

4.1 Securing the implement for service

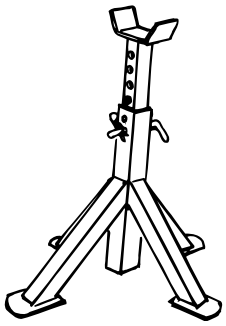

Figure 4.1

Never work under the implement when carrying out service or maintenance without ensuring that the machine is properly supported on stands or the like on a firm and level surface. Also block the lifting ram of the centre section as explained below.

“Figure 4.2” shows the recommended placement of the trestles.

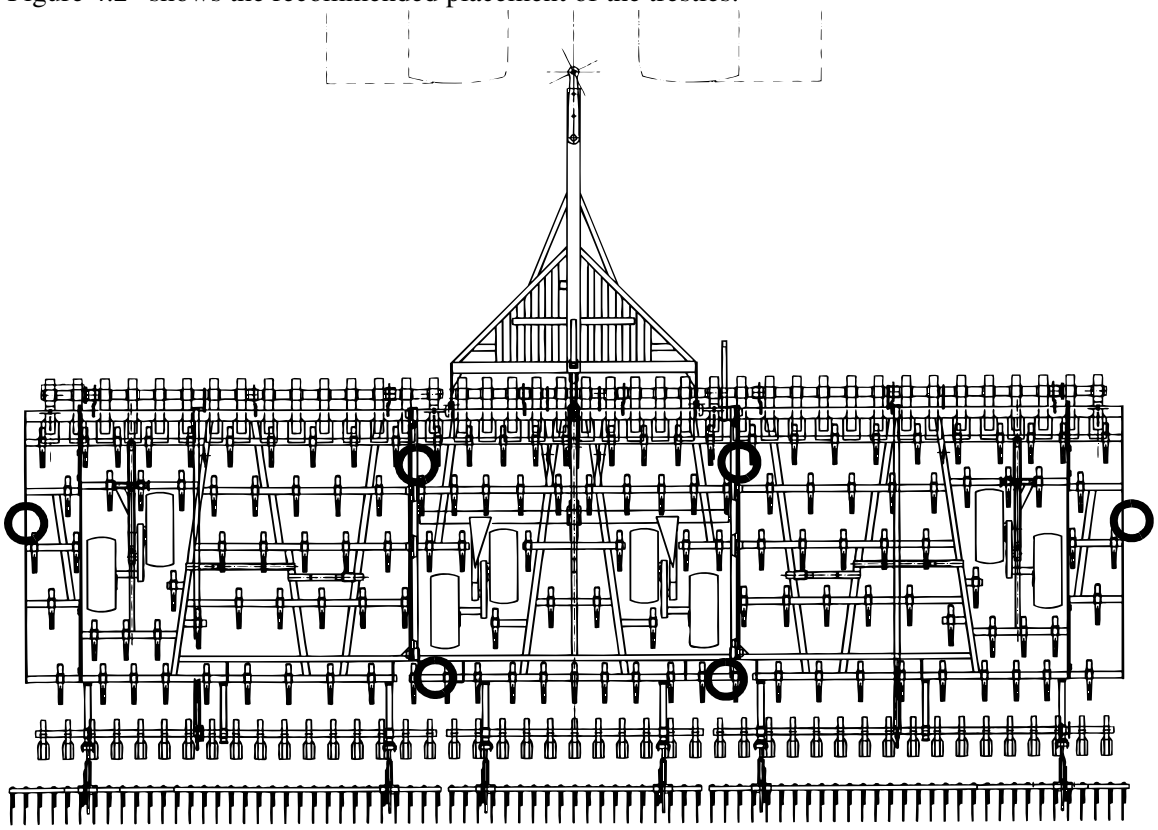

Figure 4.2

4.1.1 Securing the centre section lifting ram

NZA 600-1000

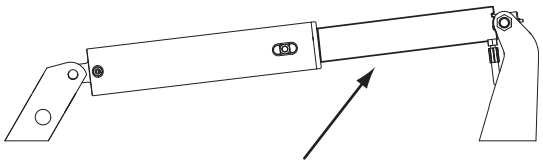

Figure 4.3

NZA 500 ST

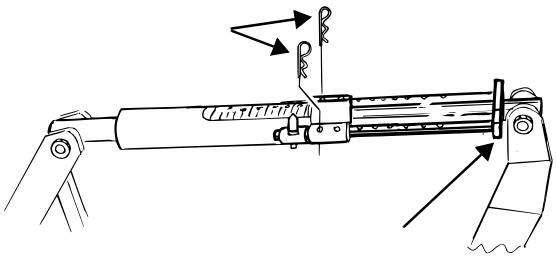

Figure 4.4

NZA 600-1000: Block the lifting ram of the centre section with the yellow locking device.

NZA 500 ST-600T: Pull out the lifting ram stopper as far as it will go and lock it with the locking pins. Check that the locking pins are not defective. Replace the pins if they are found to be defective.

NZA 500-1000

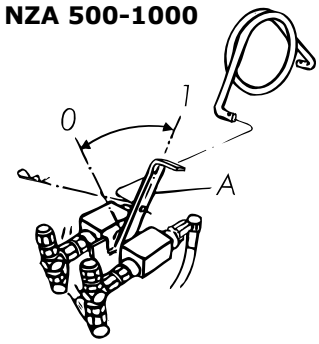

Figure 4.5

When, for example, replacing the tines on the wings with the implement folded down, the cock for the wing folding-action should be set to position 0, “Figure 4.5”.

In connection with service or repair work on the hydraulic system, the wings must be lowered and the cultivator lowered to the ground!

4.2 No machine is better than the service it receives!

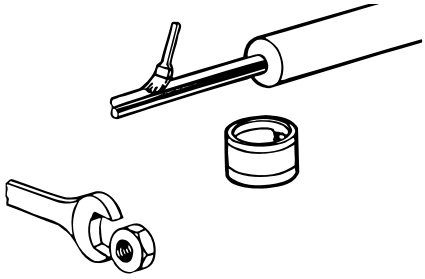

Figure 4.6

Before using the machine, check that all nuts and bolts have been tightened (this does not apply to bolts in moving joints, such as at Crossboard, hydraulic rams, etc.). During the season, check periodically that the nuts and bolts have not worked loose. Coat the piston rods with grease or thick oil if the cultivator is not going to be used for a lengthier period of time and always after cleaning it.

Follow the lubrication schedule, see ”*4.12 Lubrication points” on page 43*.

The hydraulic system will not normally require any maintenance but check that hoses and couplings have not been damaged. To preserve the high quality of the cultivator, always use genuine Väderstad spare parts.

4.3 The stretching screw of the turn buckle

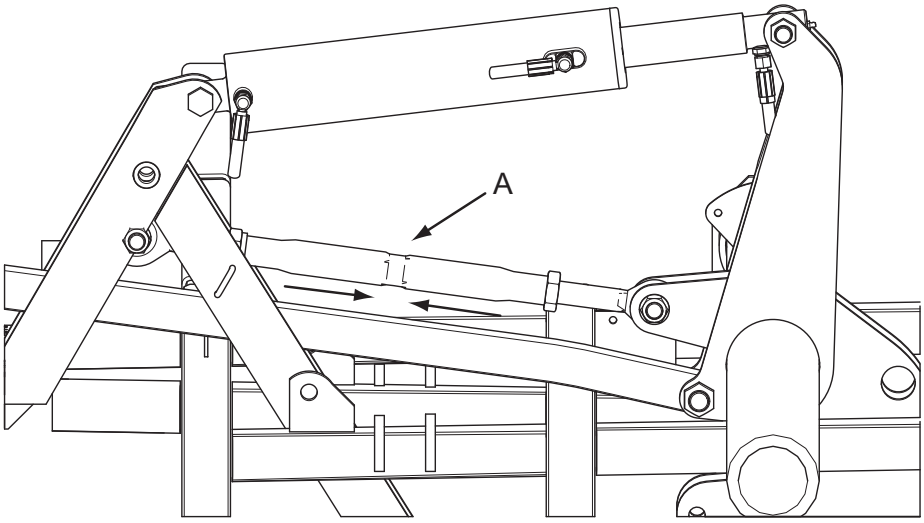

Figure 4.7

Applies to NZA 700-1000
When the harrow is used for the first time, the stretching screw (A) between the turn buckle and the ram bracket on the centre section must be tightened after several hours of operation. Undo the securing plate and pull the stretching screw together until it is set in firm position with no play. Do not tighten too much. Lock using the securing plate.
Following this, regularly inspect the tightening of the stretching screw.

The stretching screw doubles as a draw bar. It relieves the harrow frame from the compressing strains caused by the lifting ram.

4.4 Unsynchronized wing folding

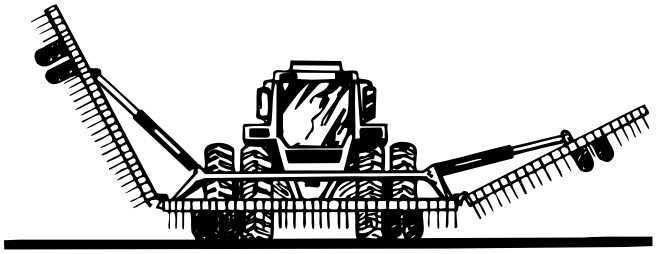

Figure 4.8

Applies to NZA 900-1000
In the case of unsynchronized wing folding on NZA 900-1000 cultivators, the probable cause is binding of the slide inside the valve block. See ”*4.5 Valve block cleaning” on page 38*:

4.5 Valve block cleaning

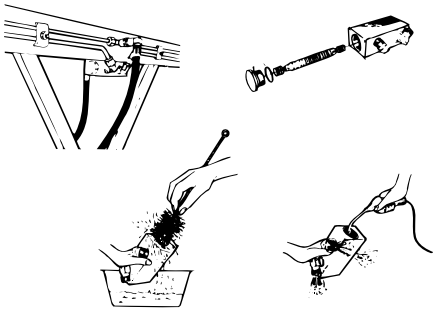

Figure 4.9

Applies to NZA 900-1000

A Release the pressure in the hydraulic hoses.

B Detach the hydraulic hoses connected to the valve block.

C Unscrew the valve block from the piston support.

D Dismantle the entire valve block and clean all parts in paraffin or similar solvent. Blow dry with compressed air.

E Lubricate all the internal parts with oil. Check that the slide in the valve moves freely without binding. Assemble the valve block.

F Clean all hydraulic connections thoroughly before assembly.

G Then mount the valve block on the cultivator.

4.6 Check and adjustment of play in wheel bearings

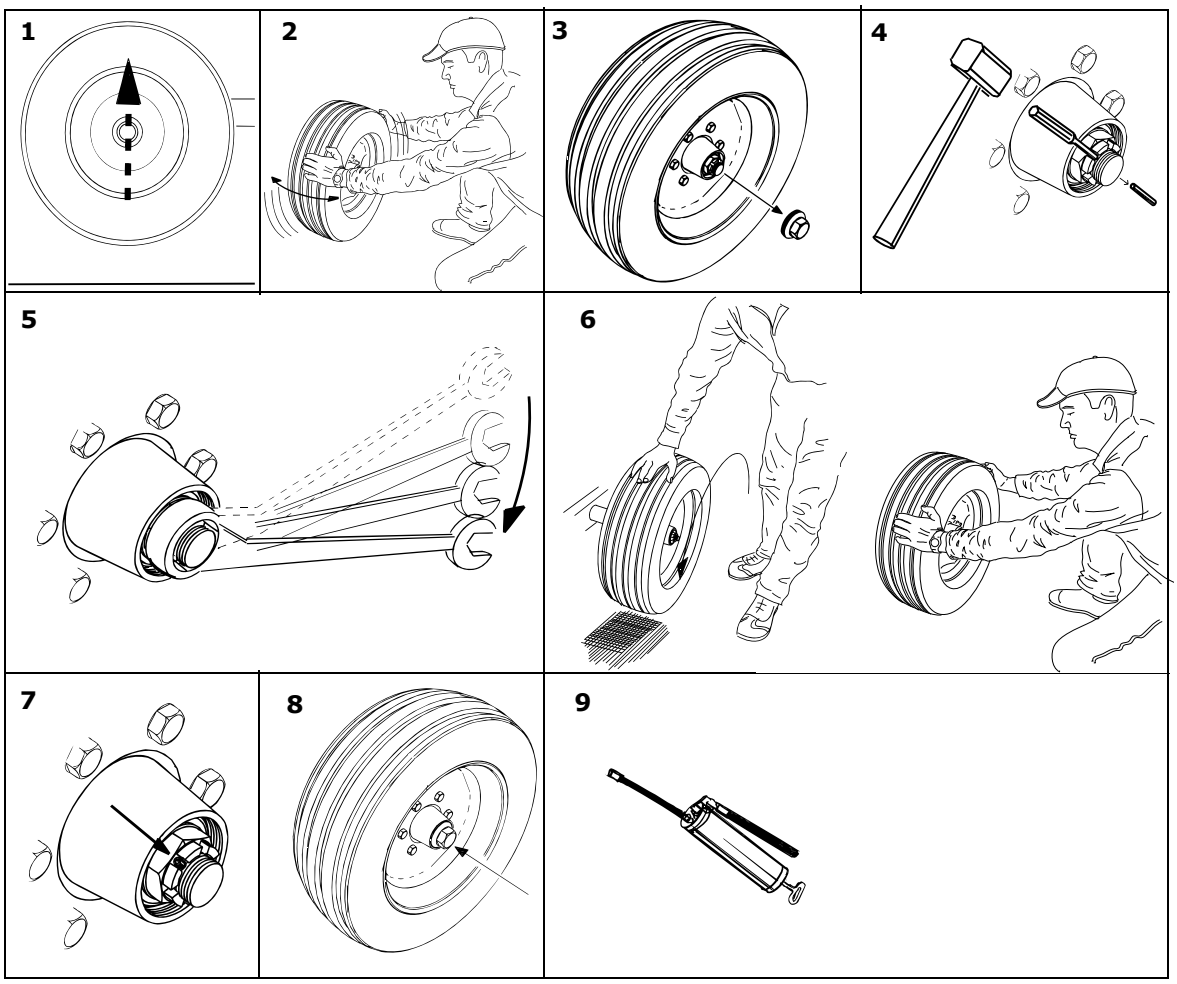

Figure 4.10

It is of utmost importance that the play in the wheel bearings is checked and possible adjusted after the first season and at regular intervals after that.regelbundet.

1 Lift the wheel off the ground.
2 Feel the wheel; the wheel must be tensioned if you can you feel any play.
3 Remove the hub cap.
4 Slacken the tension pin.
5 Tighten the castle nut carefully with a hand tool.
6 Feel that the wheel rolls easily without any play.
7 Lock using the roll pin.
8 Mount the hub cap.
9 Lubricate until grease comes out.

4.7 Wheel changing

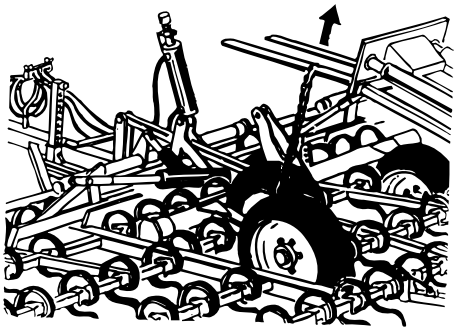

Figure 4.11

Release the hydraulic pressure. Undo the nut and bolt round the uprights on the rocker tube and twist the hydraulic ram towards the drawbar. Pass a chain round the wheel axle and raise it by means of a loader or jack. The wheel can then be removed with ease.

When changing a wheel on the outer section the ram need not be removed.

4.8 Changing the ram seals

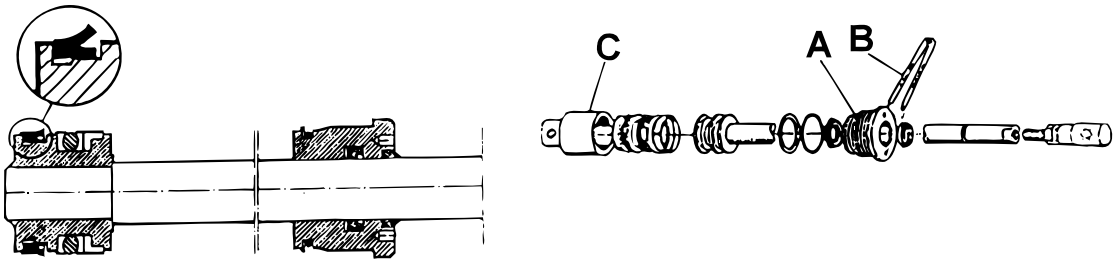

Figure 4.12

A Loosen and screw out the piston rod guide A using the caliper spanner B.

B Withdraw the piston rod. The seal can now be changed. NOTE: Take great care to ensure that the seals face the right way round.

C Carefully check that tubular casing C is not scratched or scored.

D Fit in reverse order.

When changing the ram seals, the overbleed groove or holes should always be cleaned with fine emery cloth along the length of the ram. Rinse the ram thoroughly before assembly.

NOTE!Check that the seals are correctly fitted.

Mount the ram on the cultivator and bleed the hydraulic system, see *”4.9 Troubleshooting the master and slave system” on page 41.*

4.9 Troubleshooting the master and slave system

If the hydraulic master and slave system for depth control of the wheels or Crossboard should start to give trouble, test the system and trace the fault as follows:

A Check that cultivator's snap-on coupling fits the coupling on the tractor and that neither are damaged.

B Check that the double-acting functions from the cultivator are connected to the right hydraulic take-off on the tractor.

C Check that the reverse-action valve for wing folding and the Crossboard is in its end position for transport and harrowing. If necessary, adjust the valve or move the spring, see *"3.5 Adjusting the reverse-action valve" on page 24.*

4.9.1 If the wing sections change relative to the centre section!

D Check the couplings for leakage.

E Check that there is no air in the hydraulic system.

F If necessary, change the seals on the master ram, see *"4.8 Changing the ram seals" on page 40.*

4.10 Bleeding the hydraulic system for depth control

To bleed the hydraulic system it is not necessary to unscrew any couplings. You quite simply use the tractor's hydraulic system.

A Fold out the cultivator to the working position.

A Press out the rams (raise the cultivator). Keep the tractor's hydraulic lever in this position so that the fluid continues to be pressed out into the rams (about 1-2 minutes). When the first ram has been filled with fluid, the fluid is pressed further via an overbleed valve to the other ram, which is then filled with fluid The fluid is then pressed further to the third ram, and so on.

4.11 Bleeding the hydraulic system for the Crossboard

To bleed the hydraulic system it is not necessary to unscrew any couplings. You quite simply use the tractor's hydraulic system.

A Lower the cultivator to the working position.

B Press out the rams. Keep the tractor's hydraulic lever in this position so that the fluid continues to be pressed out into the rams (about 1-2 minutes). When the first ram has been filled with fluid, the fluid is pressed further via an overbleed valve to the other ram, which is then filled with fluid The fluid is then pressed further to the third ram, and so on.

NOTE!Do not use the float position of the tractor's double-acting hydraulic system. If the float position is used, air could be sucked into the cultivator's hydraulic system

Make a habit of bleeding the hydraulic system each time the cultivator is hitched to the tractor before you start using it, and also a few times during the day when you are using the cultivator. Bleeding the system takes only 10-15 seconds.

4.12 Lubrication points

NZA 500-600

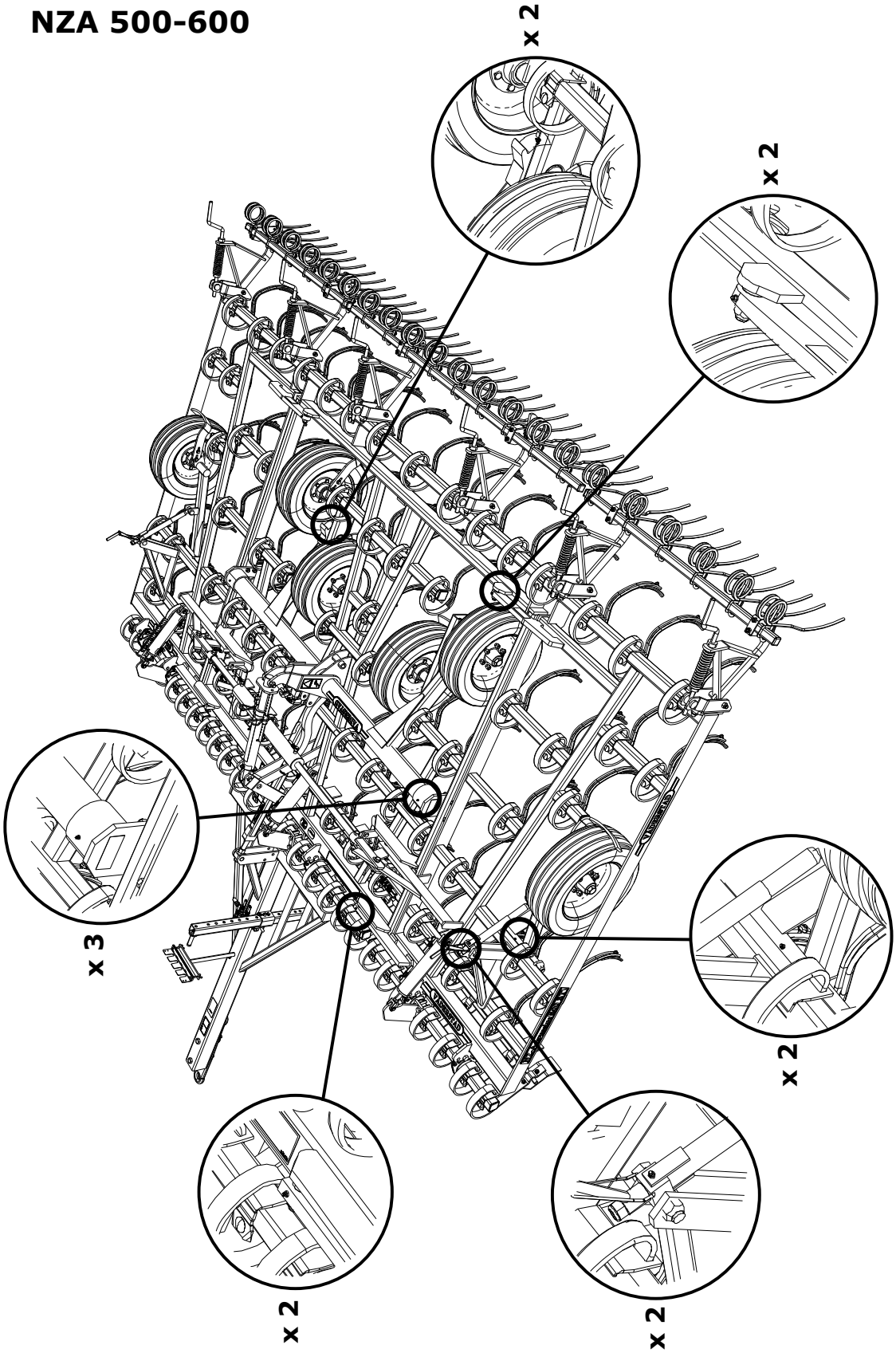

Figure 4.13

NZA 700-1000

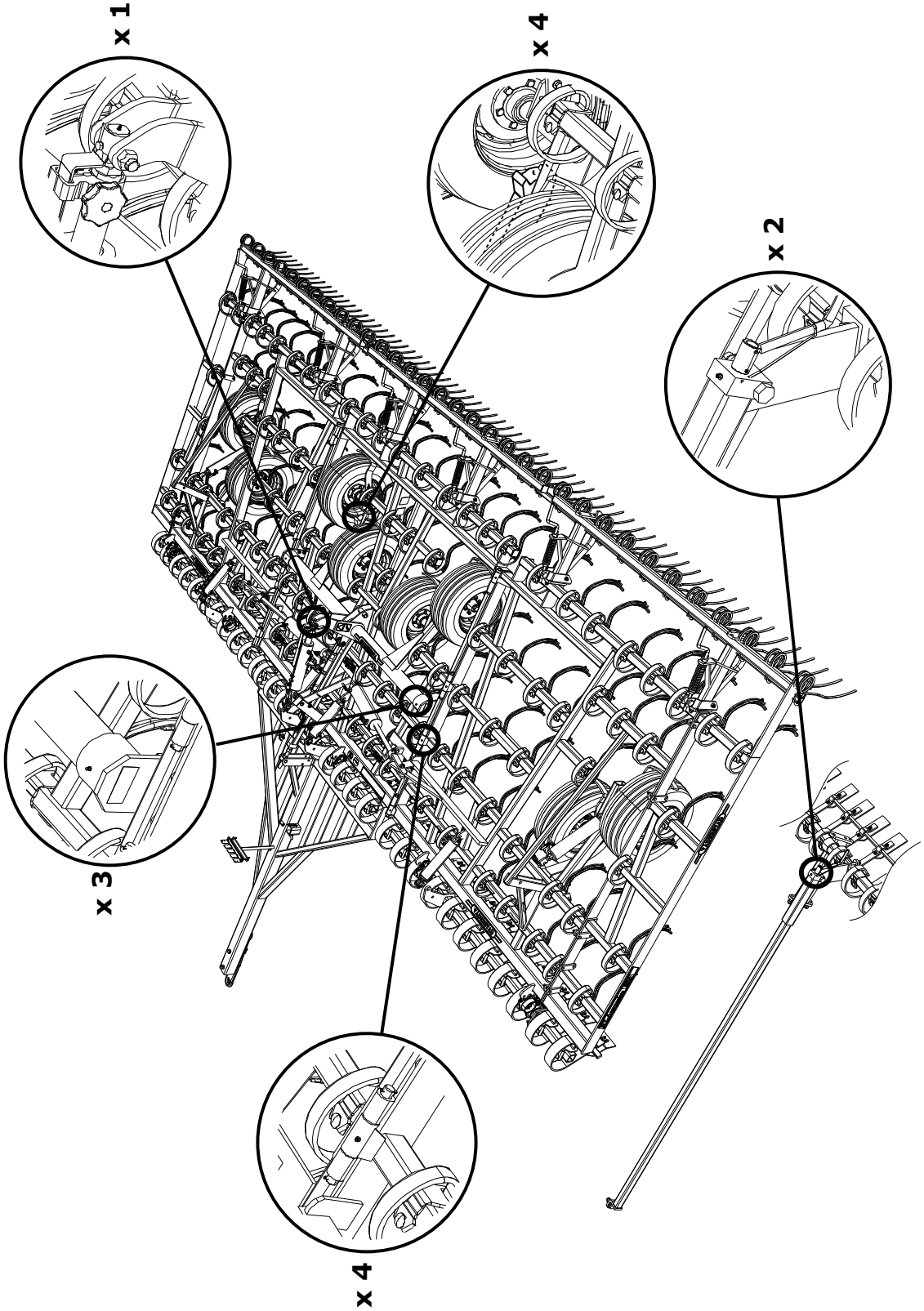

Figure 4.14

5 Attachment

5.1 Hydraulic schematic diagram

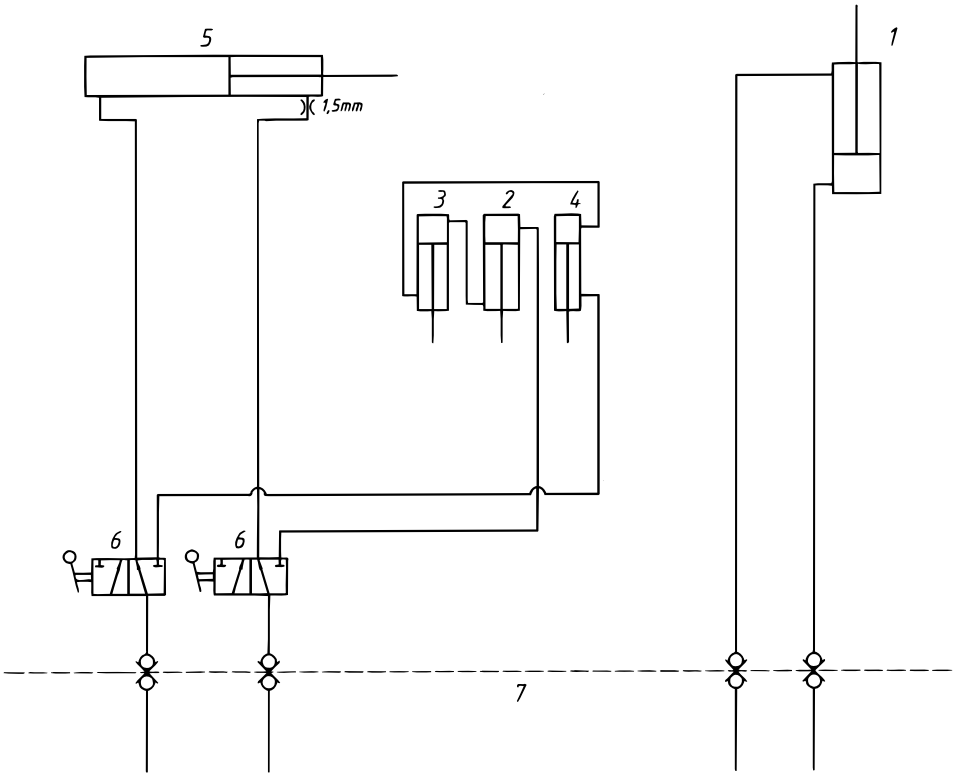

Figure 5.1 NZA 500 ST

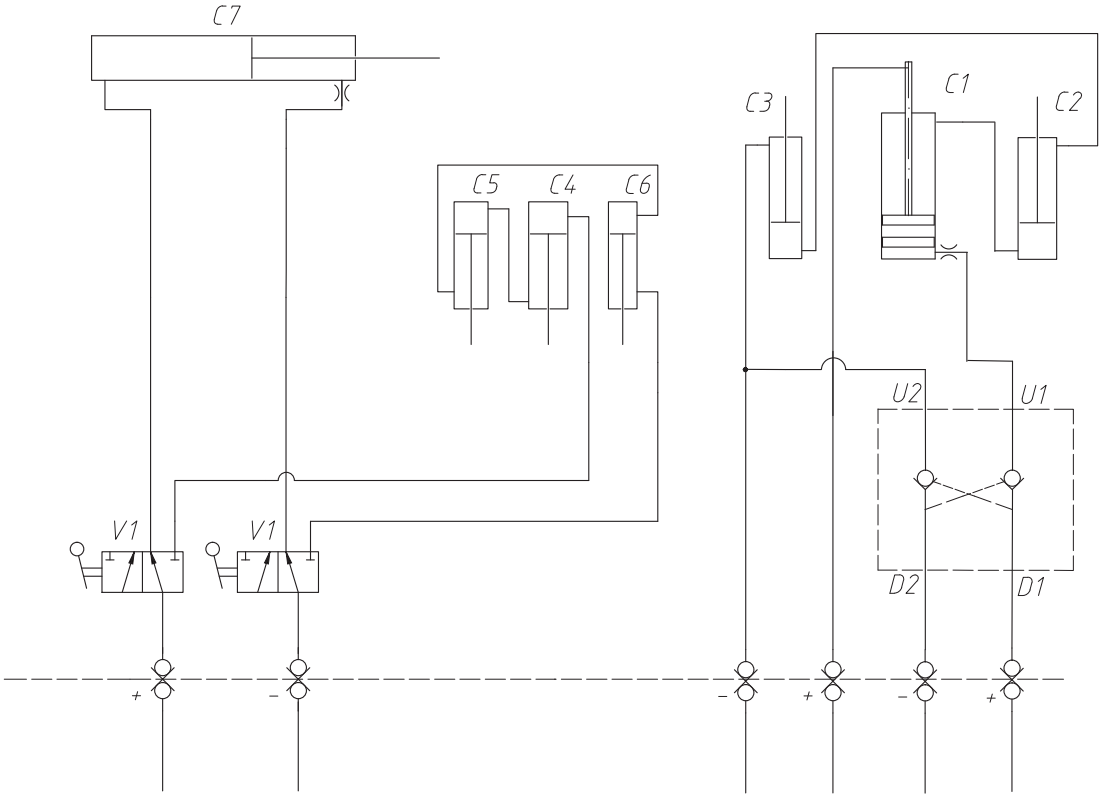

Figure 5.2 NZA 600, 600 T

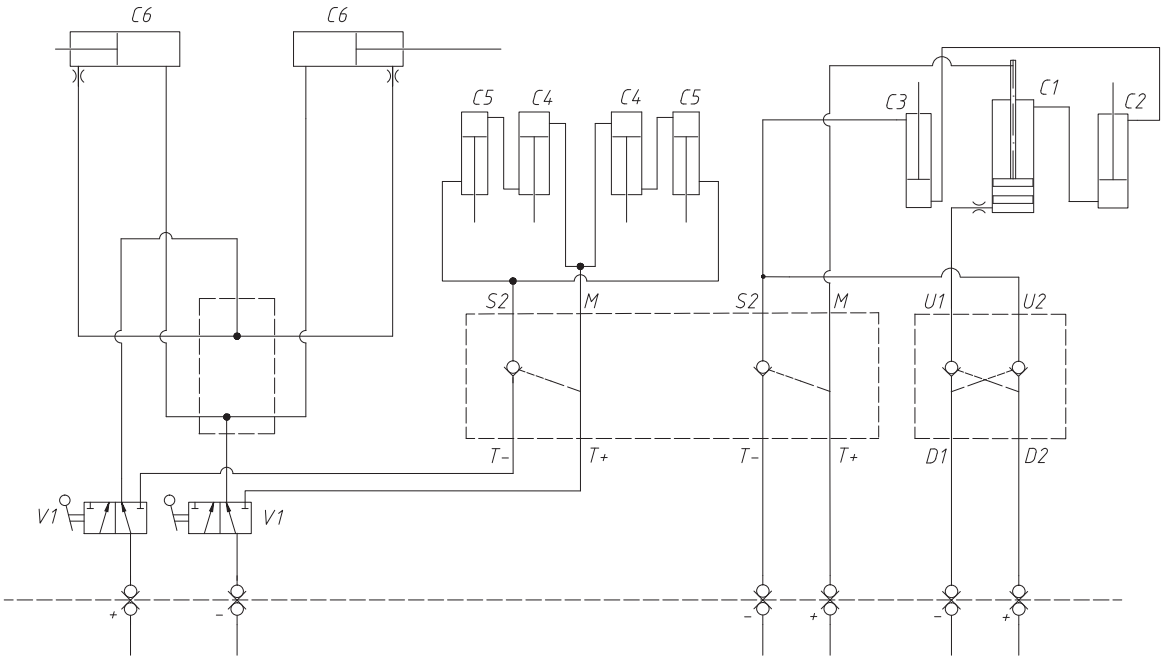

Figure 5.3 NZA 700-800

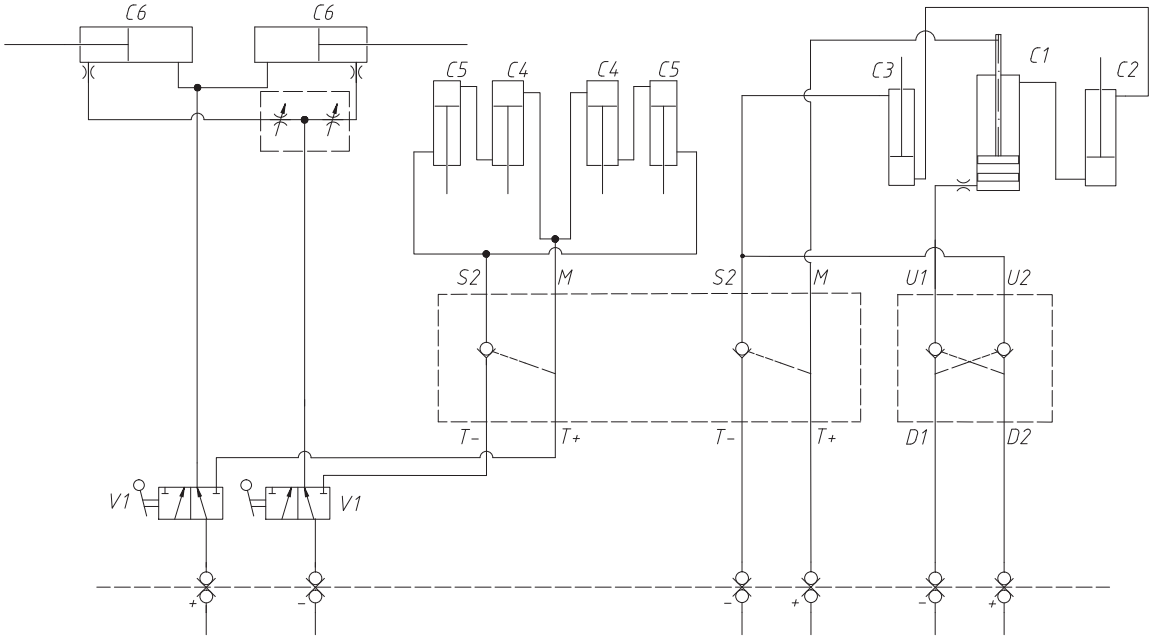

Figure 5.4 NZA 900-1000

5.2 Technical Data

Table 5.1

Machine	NZA 500ST	NZA 600	NZA 600T
Work width (m)	5,0	6,0	6,0
Transport width (m)	3,0	3,0	3,0
Transport height (m)	2,45	2,95	2,95
Weight (kg)*	2050	2880	2400
Number of harrow tines	65	79	79
Power requirement (kW), approx.* **	65	95	75
Mounted implement weight of tractor (kg)*	160	180	180

* With mounted front and rear Crossboards and following harrow

** Power requirement indications are given in kilowatts (kW) for the tractor PTO

Table 5.2

Machine	NZA 700	NZA 800	NZA 900	NZA 1000
Work width (m)	7,0	8,0	9,0	10,0
Transport width (m)	3,60	3,60	3,90	3,90
Transport height (m)	3,15	3,65	3,95	4,45
Weight (kg)*	3400	4200	4400	4900
Number of harrow tines	93	105	121	133
Power requirement (kW), approx.* **	110	130	145	180
Mounted implement weight of tractor (kg)*	300	320	320	350

* with front Crossboard and following harrow

** Power requirement indications are given in kilowatts (kW) for the tractor PTO

5.2.1 Tyre pressure

Tabell 5.3

Machine	Pressure
NZA 500	2,0 bar
NZA 600T	2,6 bar
NZA 600	3,6 bar
NZA 700	3,0 bar
NZA 800	3,5 bar
NZA 900	4,0 bar
NZA 1000	4,5 bar

590 21 VÄDERSTAD

Telefon 0142-820 00
Telefax 0142-820 10
www.vaderstad.com

S-590 21 VÄDERSTAD
SWEDEN

Telephone +46 142 820 00
Telefax +46 142 820 10